ALPHA MICROSYSTEMS
RIGHT. FROM THE START.

AM-219
Diskette Drive Controller Installation Instructions

PDI-00219-00, Rev. A01

© 1996 Alpha Microsystems

REVISIONS INCORPORATED	
REVISION	DATE
00	May 1994
01	November 1996

AM-219 Diskette Drive Controller Installation Instructions
To re-order this document, request part number PDI-00219-00.

The information contained in this manual is believed to be accurate and reliable. However, no responsibility for the accuracy, completeness or use of this information is assumed by Alpha Microsystems.

This document was written by Jack Chardi.

This document may contain references to products covered under U.S. Patent Number 4,530,048.

The following are registered trademarks of Alpha Microsystems, Santa Ana, CA 92799:

AMIGOS	AMOS	Alpha Micro	AlphaACCOUNTING
AlphaBASIC	AlphaCALC	AlphaCOBOL	AlphaDDE
AlphaFORTRAN 77	AlphaLAN	AlphaLEDGER	AlphaMAIL
AlphaMATE	AlphaNET	AlphaPASCAL	AlphaRJE
AlphaWRITE	CASELODE	OmniBASIC	VER-A-TEL
VIDEOTRAX			

The following are trademarks of Alpha Microsystems, Santa Ana, CA 92799:

AlphaBASIC PLUS	AlphaVUE	AM-PC	AMTEC
AlphaDDE	AlphaConnect	DART	*in*Sight/am
*in*Front/am	ESP	MULTI	

All other copyrights and trademarks are the property of their respective holders.

ALPHA MICROSYSTEMS
2722 S. Fairview St.
P.O. Box 25059
Santa Ana, CA 92799

TABLE OF CONTENTS

1.0 INTRODUCTION 1

2.0 AM-219 SPECIFICATIONS 1

3.0 PRODUCT INSTALLATION KIT 2
- 3.1 3.5" Diskette Drive Specifications 2
- 3.2 5.25" Diskette Drive Specifications 3

4.0 CONFIGURING THE AM-219 BOARD 4

5.0 CONFIGURING YOUR DISKETTE DRIVE 5
- 5.1 Panasonic JU-475-2 Diskette Drive Configuration 6
- 5.2 Panasonic JU-475-3 Diskette Drive Configuration 7
- 5.3 Panasonic JU-475-4 Diskette Drive Configuration 8
- 5.4 Toshiba ND-0801 Diskette Drive Configuration 9
- 5.5 Epson SD-680L Diskette Drive Configuration 10
- 5.6 TEAC FD-55GFR Diskette Drive Configuration 11
- 5.7 Toshiba ND365T Diskette Drive Configuration 12
- 5.8 Toshiba ND3651 Diskette Drive Configuration 13
- 5.9 Toshiba ND3651GR Diskette Drive Configuration 14
- 5.10 TEAC FD-235HF Diskette Drive Configuration 15
- 5.11 EPSON SMD-300 Diskette Drive Configuration 16

6.0 DISKETTE DRIVE INSTALLATION IN AM-1400/1600 DESKTOP COMPUTERS 16

7.0 DISKETTE DRIVE INSTALLATION IN RACK MOUNT AND PEDESTAL COMPUTERS 19
- 7.1 Front Bezel Removal and Modification 20
- 7.2 Building and Installing the Diskette Drive Mounting Assembly 20
- 7.3 Installing a 3.5" Drive in Pedestal and Rack Mount Chassis 22
- 7.4 Diskette Drive Installation in Other Applications 23

8.0 INSTALLING THE AM-219 BOARD 23

9.0 CONNECTING THE INTERFACE CABLE 32
- 9.1 Connecting the Power Cable 32

10.0 FINISHING THE INSTALLATION 32

11.0 CREATING A SOFTWARE DRIVER 33

12.0 MODIFYING THE SYSTEM INITIALIZATION COMMAND FILE 36
12.1 Modifying the Device Table 36
12.2 Adding a BITMAP Statement 36
12.3 Adding the Device Driver to System Memory 37
12.4 Sample System Initialization Command File 37
12.5 Testing the Initialization File 37

13.0 FORMATTING AND INITIALIZING A DISKETTE 38

14.0 USING YOUR DISKETTE DRIVE 39

1.0 INTRODUCTION

This document provides hardware and software instructions for installing an AM-219 diskette drive controller and drive assembly into AM-1400, AM-1600, AM-3000M, AM-4000, and all Eagle series computers. The AM-219 is a high-speed controller based on the industry standard 37C65 diskette drive controller chip. Unlike earlier Alpha Micro controllers, the AM-219 contains a fully digital data separator which requires no adjustments or calibration for any of the supported diskette formats.

The AM-219 is designed for use with diskette drives found in IBM PC/AT compatible computers. Some older diskette drives used in "AMOS only" configurations may not be supported by the AM-219; however, with the low cost and availability of PC/AT compatible diskette drives, changing over to a new drive is not an expensive proposal.

Earlier AMOS diskette controllers supported several different formats, some of which were either obsolete or unused. The driver configuration program for the AM-219, FIX219, supports the following formats:

- AMOS 720KB 3.5" double density
- AMOS 800KB 5.25" double density
- AMOS 1.2MB 5.25" high density
- AMOS 1.44MB 3.5" high density
- PC 360KB 5.25" double density
- PC 720KB 3.5" double density
- PC 1.2MB 5.25" high density
- PC 1.44MB 3.5" high density

The AM-219 diskette controller does not support the AM-121 VPC board!

2.0 AM-219 SPECIFICATIONS

1. The AM-219 floppy controller is compatible with AM-1400, AM-1600, AM-3000M, AM-4000, and all Eagle series computers.
2. Drives supported: **two**
3. Maximum transfer rate: **500kbits/second**

4. Buffer RAM: **32K bytes**

5. Data Separator: **Fully digital—no adjustments required**

6. Formats supported: **eight (four AMOS and four PC)**

7. VPC support: **none**

3.0 PRODUCT INSTALLATION KIT

The AM-219 controller supports both half-height 5.25" and 3.5" diskette drives. The part number for the AM-219 product kit is PDB-00219-00. The installation kit includes the following:

- DWB-00219-00—AM-219 diskette controller.
- HDY-50001-08—standoffs for AM-219 mounting holes.
- PDI-00219-00—*AM-219 Diskette Controller Installation Instructions*.
- DWB-10218-02—34-pin interface cable, supports both single and dual diskette drive installations.
- PRA-00103-00—DC power cable assembly adapter; allows a 3.5" diskette drive to be plugged into a standard 4-pin power connector.

For installations where you are replacing an AM-214 with a new AM-219 controller, you will continue to use your existing 34-pin interface cable, which is the cable that links the diskette drive (or drives) to the controller. If you are installing an AM-219 into a computer which did not previously have an AM-214 controller, you will use the 34-pin PC style interface cable included in the installation kit. This cable (DWB-10218-02) is designed to support both single and dual drive configurations, and is long enough to work in any application.

3.1 3.5" Diskette Drive Specifications

Physical Size	3.5"
Data Capacity	1.44MB, or less depending on the format.
Diskettes	3.5", 18 sectors/track, 80 tracks/side, double sided, double density

3.5" Diskette Drive Specifications (cont.)

Transfer Rate	500K bits/second.
Latency (Average)	100 msec.
Access Time Track-to-track	3 msec.
Average Access Time	94 msec.
Track Density	135 TPI.
Recording Density	17434 bits/inch.
MTBF	10000 power on hours or more, normal duty cycle.
Soft Read Error Rate	1 x 10^-9
Hard Read Error Rate	1 x 10^-12
Seek Error Rate	1 x 10^-6

3.2"5.25" Diskette Drive Specifications

Physical Size	5.25"
Data Capacity	1.2MB, or less depending on the format.
Diskettes	5.25", 10 sectors/track, 80 tracks/side, double-sided, double-density.
Transfer Rate	300K bits/second.
Latency (Average)	94 msec.
Access Time Track-to-track	5 msec.
Average Access Time	150 msec.
Track Density	96 TPI.
Recording Density	5922 bits/inch.

5.25" Diskette Drive Specifications (cont.)

MTBF	9200 power on hours or more, 25% duty cycle.
Soft Read Error Rate	1 x 10^-9
Hard Read Error Rate	1 x 10^-12
Seek Error Rate	1 x 10^-6

4.0 CONFIGURING THE AM-219 BOARD

The AM-219's jumpers have been factory configured as shown in the following illustration. Jumpers W1 and W2 should NOT be moved; they are compatible with both 3.5" and 5.25" diskette drives.

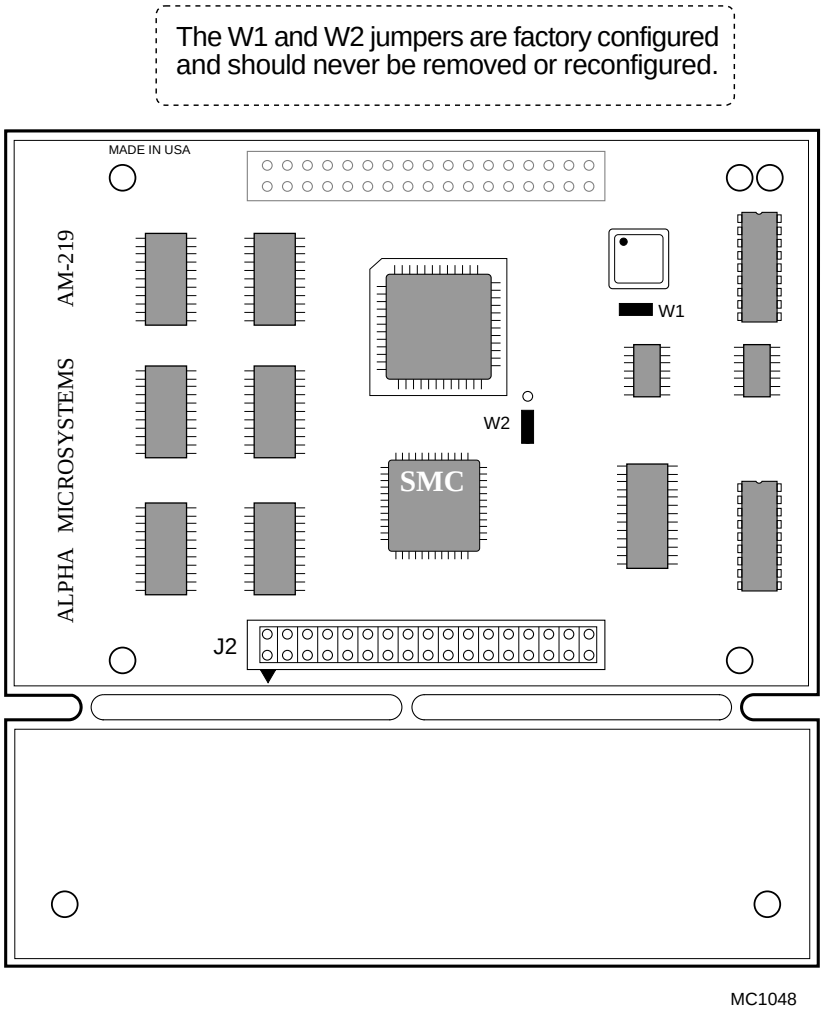

AM-219 Diskette Drive Controller

5.0 CONFIGURING YOUR DISKETTE DRIVE

This section contains configuration information for the following diskette drives:

- Panasonic JU-475-2 5.25"
- Panasonic JU-475-3 5.25"
- Panasonic JU-475-4 5.25"
- Toshiba ND0801 5.25"
- Epson SD-680L 5.25"
- Teac FD-55GFR 5.25"
- Toshiba ND356T 3.5"
- Toshiba ND3561 3.5"
- Toshiba ND3561GR 3.5"
- Teac FD-235HF 3.5"
- Epson SMD-300 3.5"

The diskette drives on the following pages represent drives sold and supported by Alpha Micro, both past and present. If you are replacing your old AM-214 board with a new AM-219 diskette controller, you will need to change the jumper configuration on your diskette drive (or diskette drives if you have two) in order for it to be AM-219 compatible. Simply locate the illustration for your particular drive and configure the jumpers as shown in the illustration. Each drive is shown with its jumpers configured for an AM-219 application, which is exactly the same configuration used in industry standard PCs. If you have a diskette drive that is not listed in this document, it can still be used with the AM-219 board as long as it is PC compatible—if it works in a PC, it will work with the AM-219 board.

Each of the diskette drive illustrations show how to configure the drive for either drive select 0 or drive select 1. If you are using a PC style 34-pin interface cable with your AM-219 board, your diskette drive (or drives if you have two) must be configured to drive select 1. With the PC style interface cable, it is the cable, not the drives, that determines which drive is 0 and which drive is 1. If you take a close look at the PC style cable, you can see a twist just before the last diskette drive connector; this twist determines the drive select number.

If you are replacing your old AM-214 with a new AM-219 controller and using your existing 34-pin interface cable, you will continue to use the traditional method of configuring drive selects in AMOS-based applications. In single drive configurations, the diskette drive must be set to drive select 0; if you have two diskette drives, you must set the second drive to drive select 1.

5.1 Panasonic JU-475-2 Diskette Drive Configuration

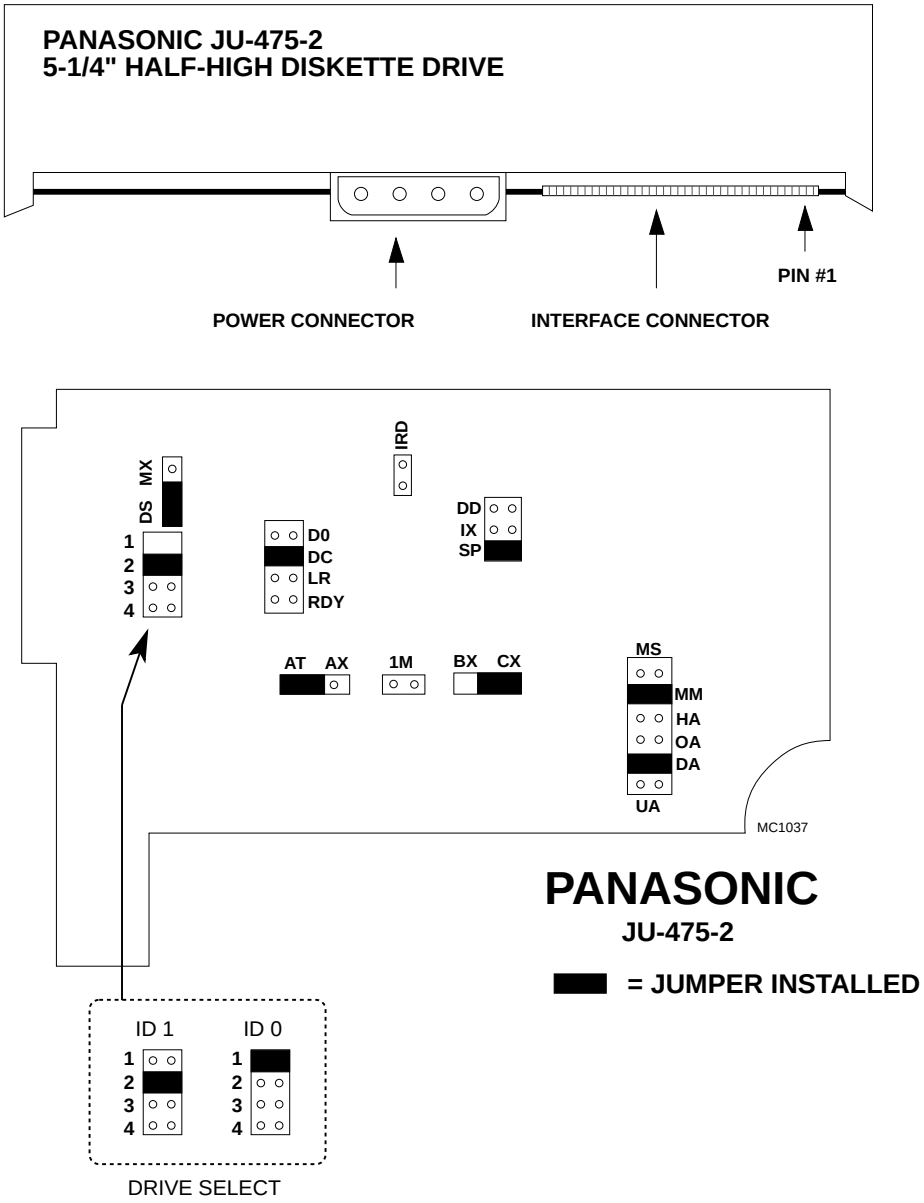

5.2 Panasonic JU-475-3 Diskette Drive Configuration

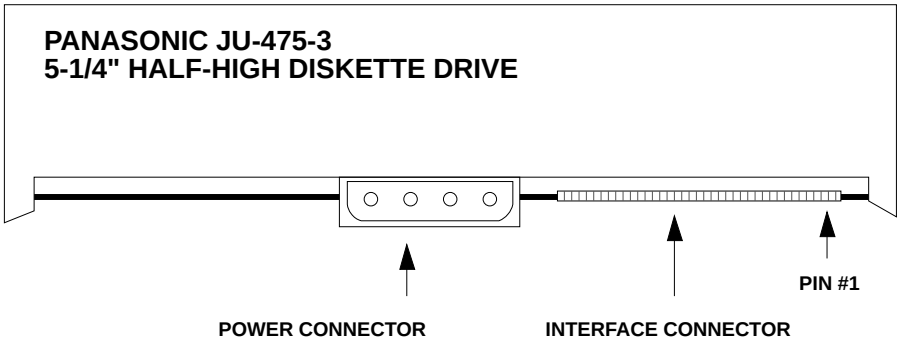

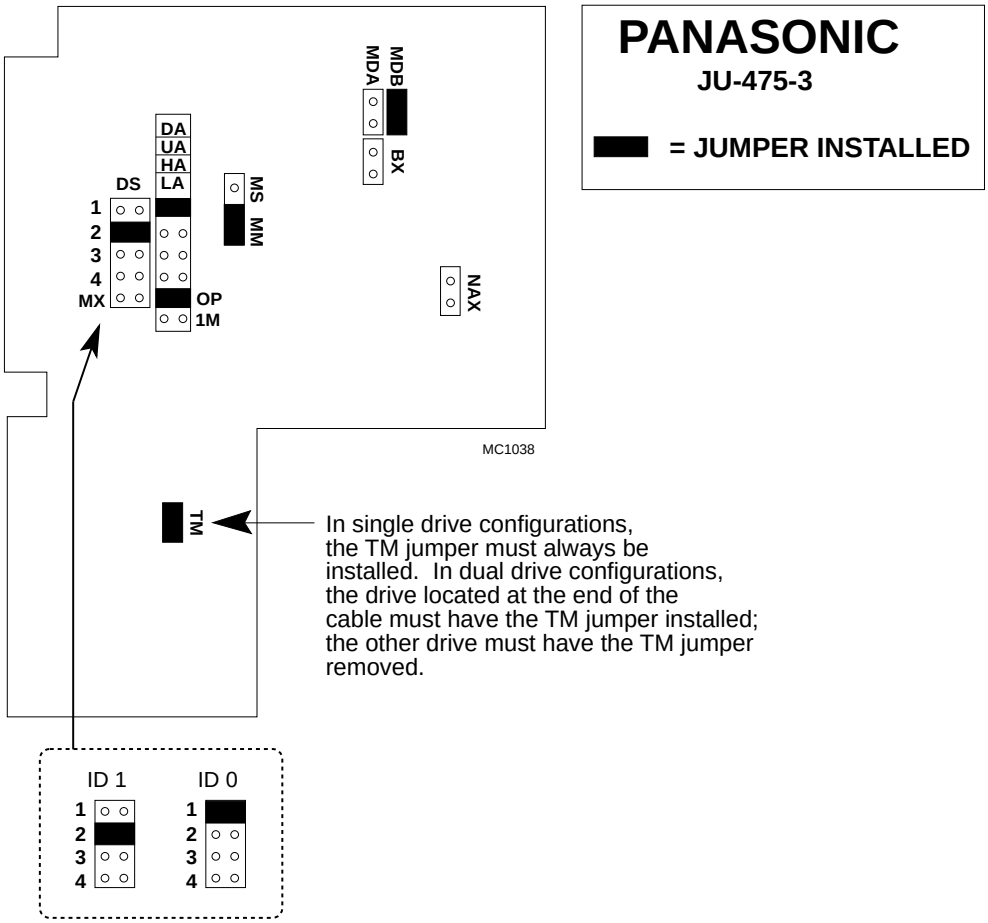

5.3 Panasonic JU-475-4 Diskette Drive Configuration

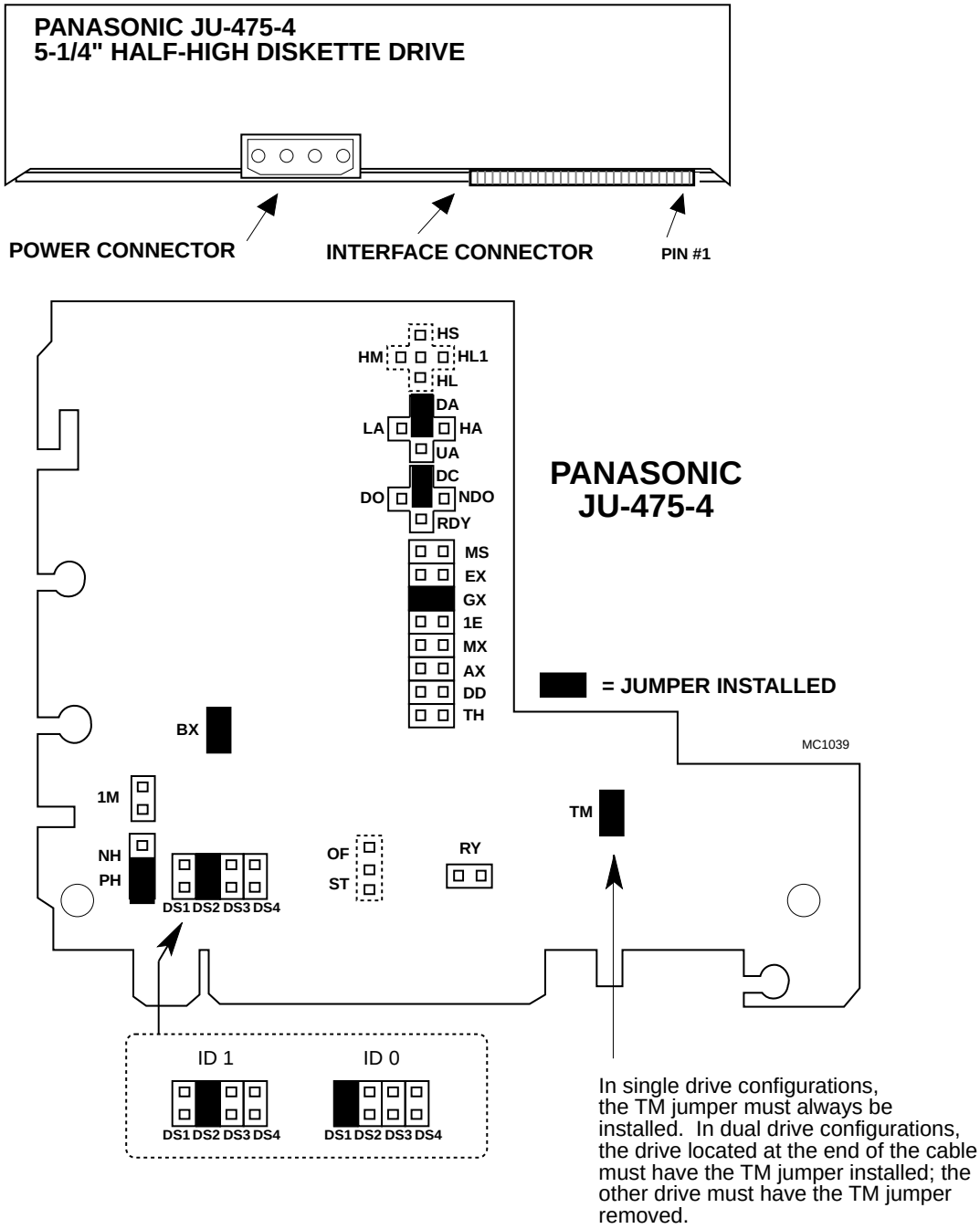

5.4 Toshiba ND-0801 Diskette Drive Configuration

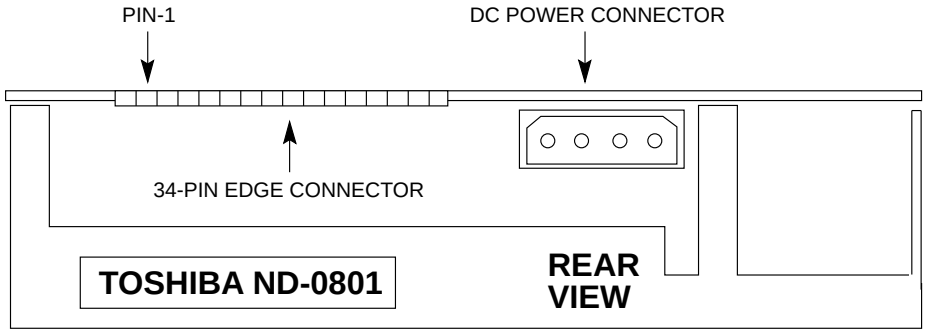

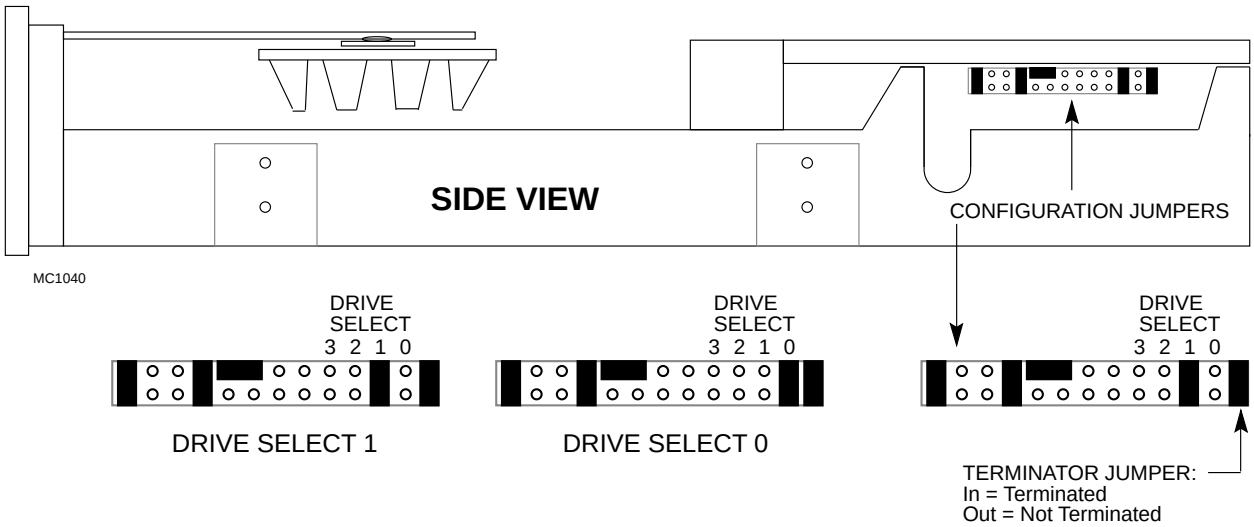

5.5 Epson SD-680L Diskette Drive Configuration

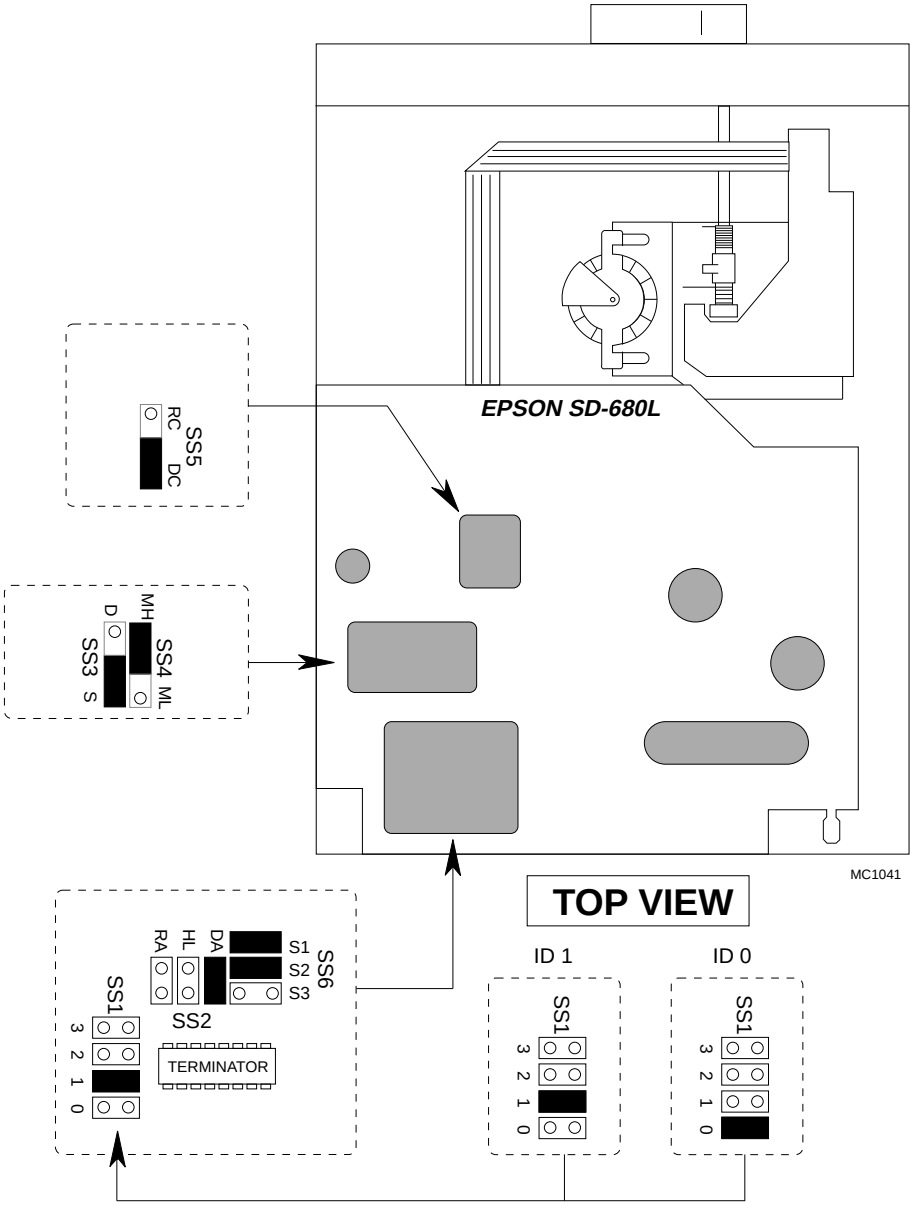

5.6 TEAC FD-55GFR Diskette Drive Configuration

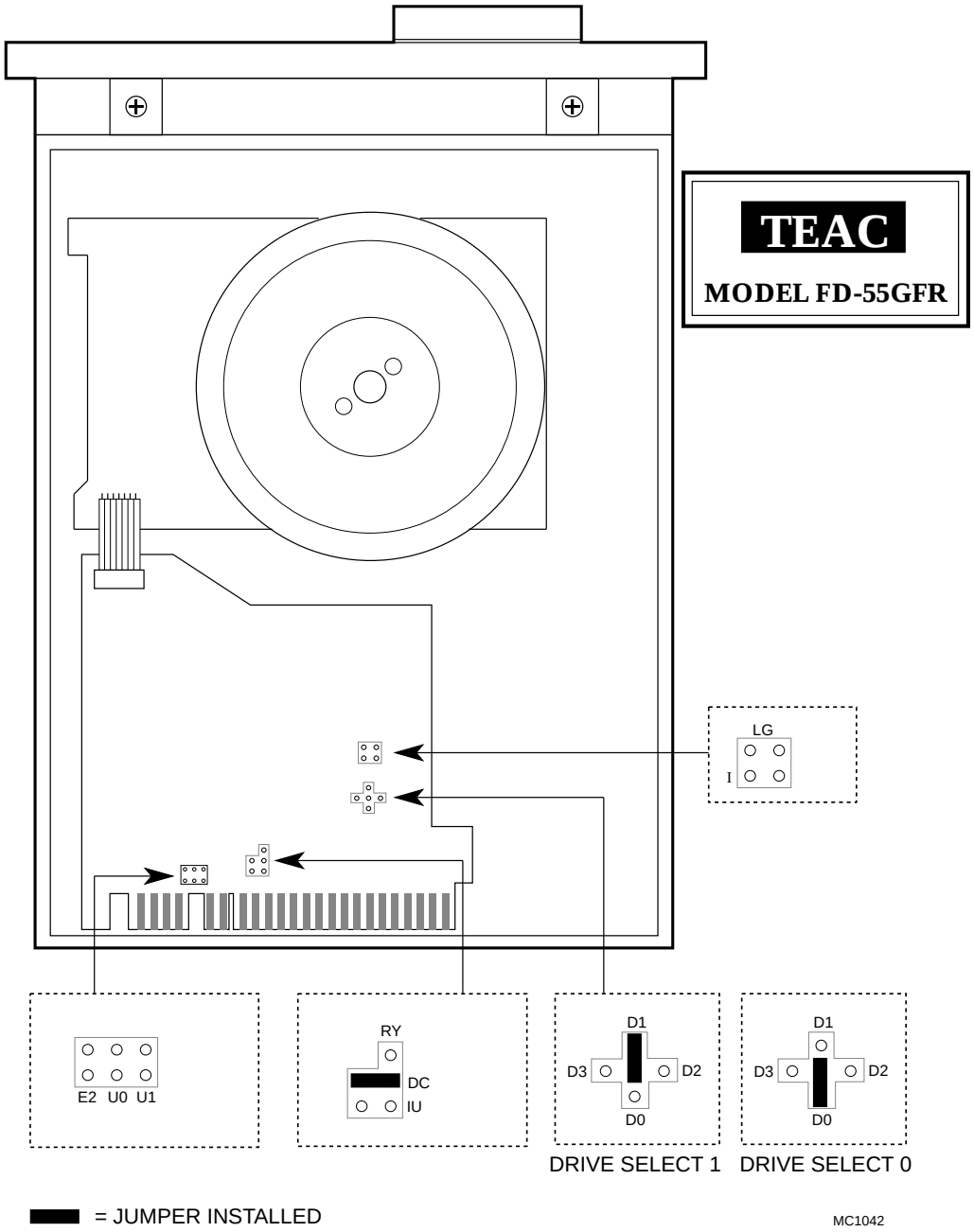

5.7 Toshiba ND365T Diskette Drive Configuration

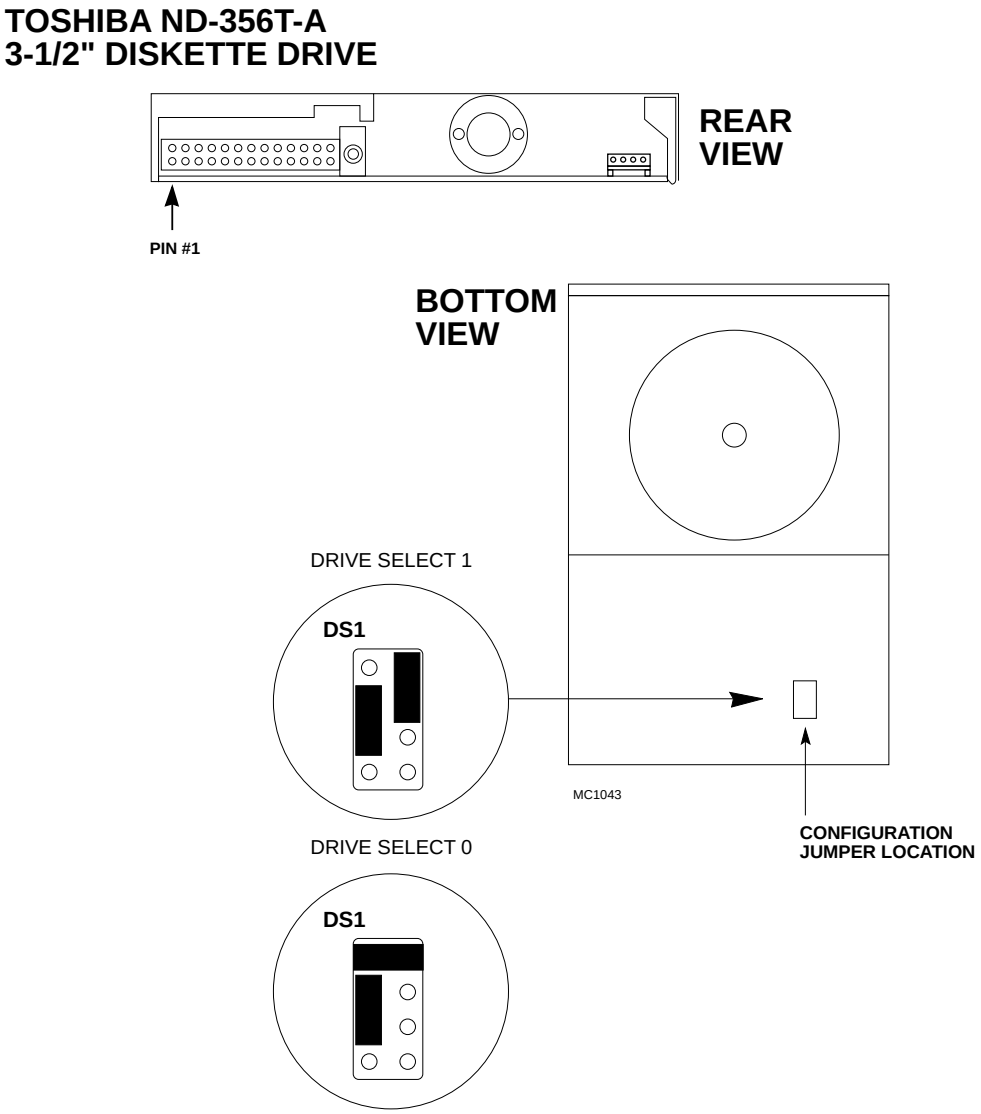

5.8 Toshiba ND3651 Diskette Drive Configuration

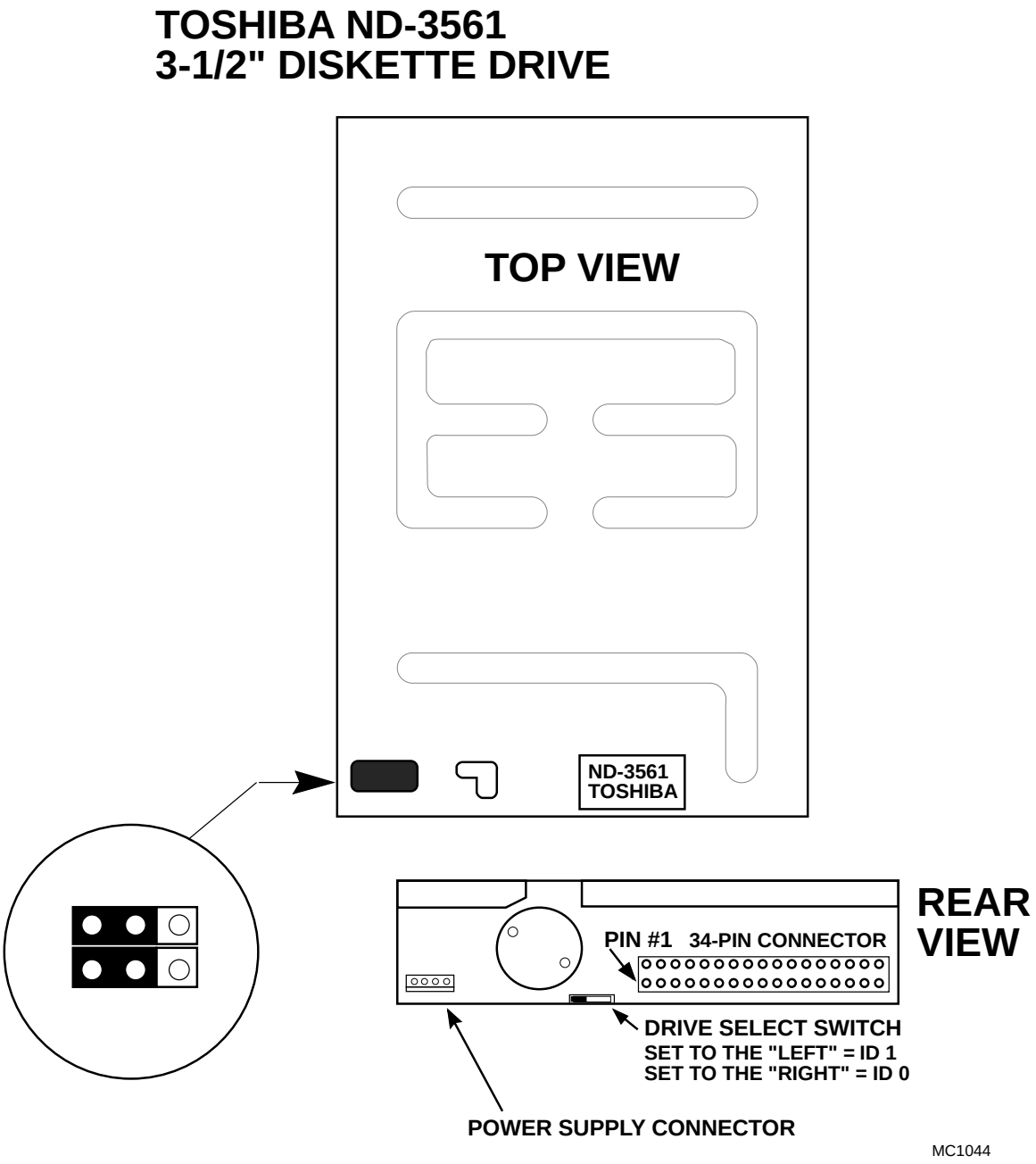

5.9"Toshiba ND3651GR Diskette Drive Configuration

TOSHIBA ND-3561GR
3-1/2" DISKETTE DRIVE

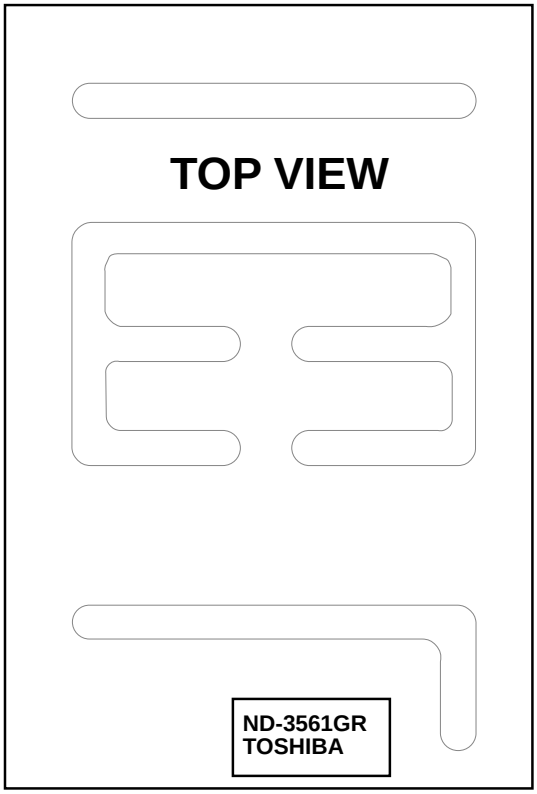

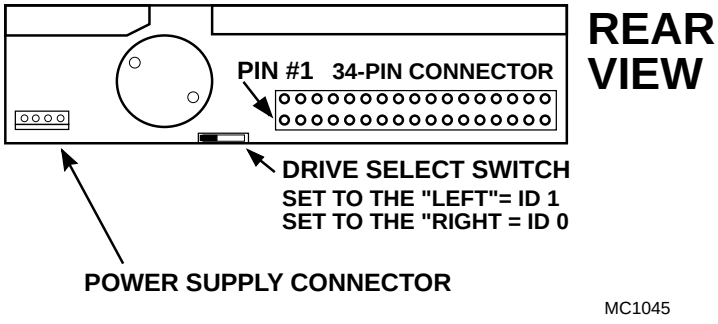

5.10 TEAC FD-235HF Diskette Drive Configuration

TEAC FD-235HF
3-1/2" DISKETTE DRIVE

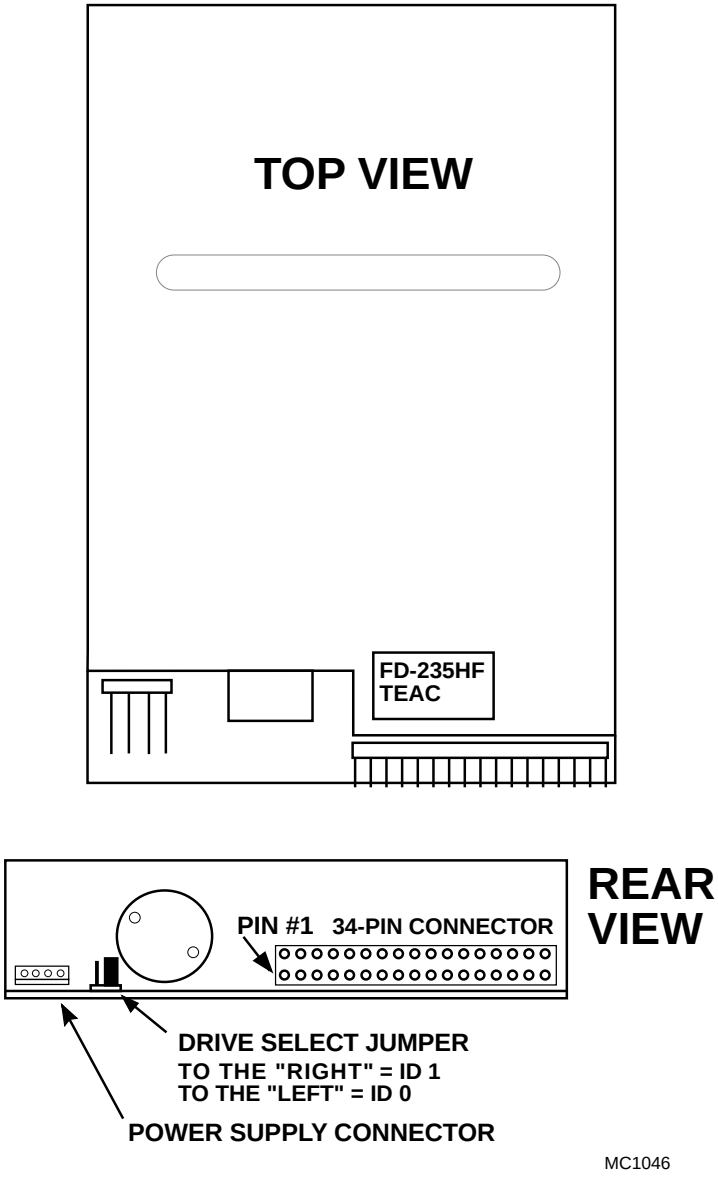

5.11 EPSON SMD-300 Diskette Drive Configuration

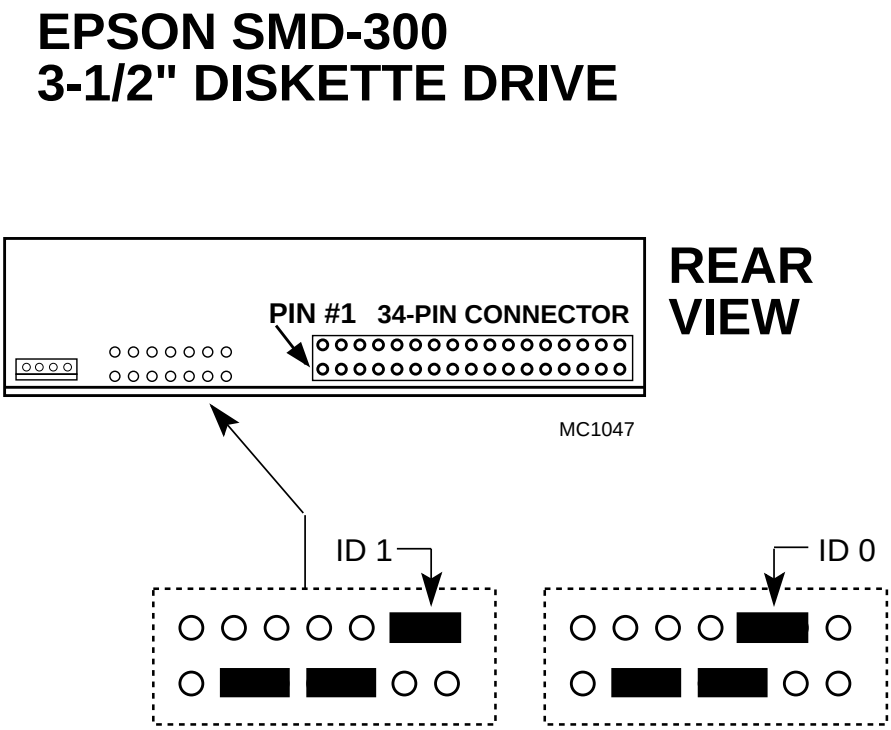

6.0 DISKETTE DRIVE INSTALLATION IN AM-1400/1600 DESKTOP COMPUTERS

The first step in the installation process is to remove the computer's top cover. The top cover is held in place with four phillips-head screws, two on each side. Remove the screws, then lift off the top cover and put it in a safe place.

Next, remove the drive mounting bracket from the chassis. The bracket is held in place with four phillips-head screws. The screw locations are shown in the illustration, called out as A, B, C, and D.

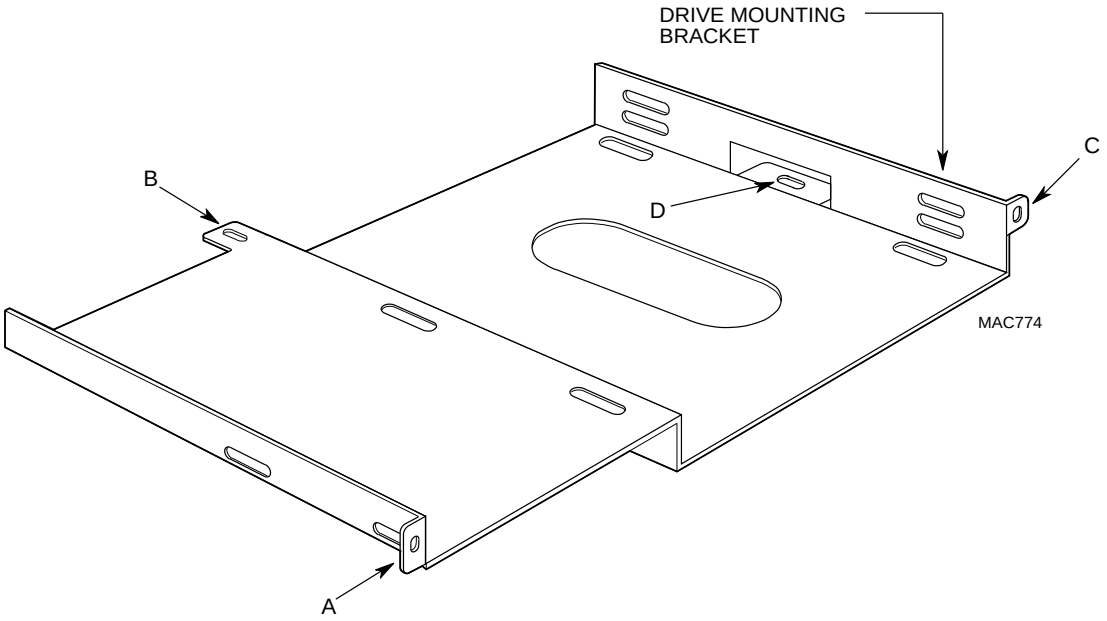

AM-1400/1600 Desktop Peripheral Mounting Bracket

Once you have taken out the screws, remove the drive mounting bracket from the chassis. Now you're ready to install your diskette drive.

Included in your mounting kit is a piece of plastic designed to fold around a 3.5" diskette drive. This piece of plastic prevents signal ground in the drive from shorting to chassis ground. The plastic folds completely around the drive and attaches to itself with a self-adhesive strip.

The two illustrations showing the diskette drives in their mounting positions show that each drive is held in place with four screws inserted through the drive mounting bracket. These four screws are included in the drive mounting kit.

The 12 volt cooling fan shown in the illustrations is included in your installation kit; it provides additional cooling for components under the AM-219 board. The extra cooling is very important. Make sure you install the fan with the air flow blowing down toward the chassis bottom.

The first illustration shows the correct mounting position for a 3.5" diskette drive; the second illustration shows the correct mounting position for a 5.25" drive. Attach your drive to the mounting bracket, but do not tighten the screws yet. Make sure you use the nylon shoulder-washers when mounting a 3.5" diskette drive.

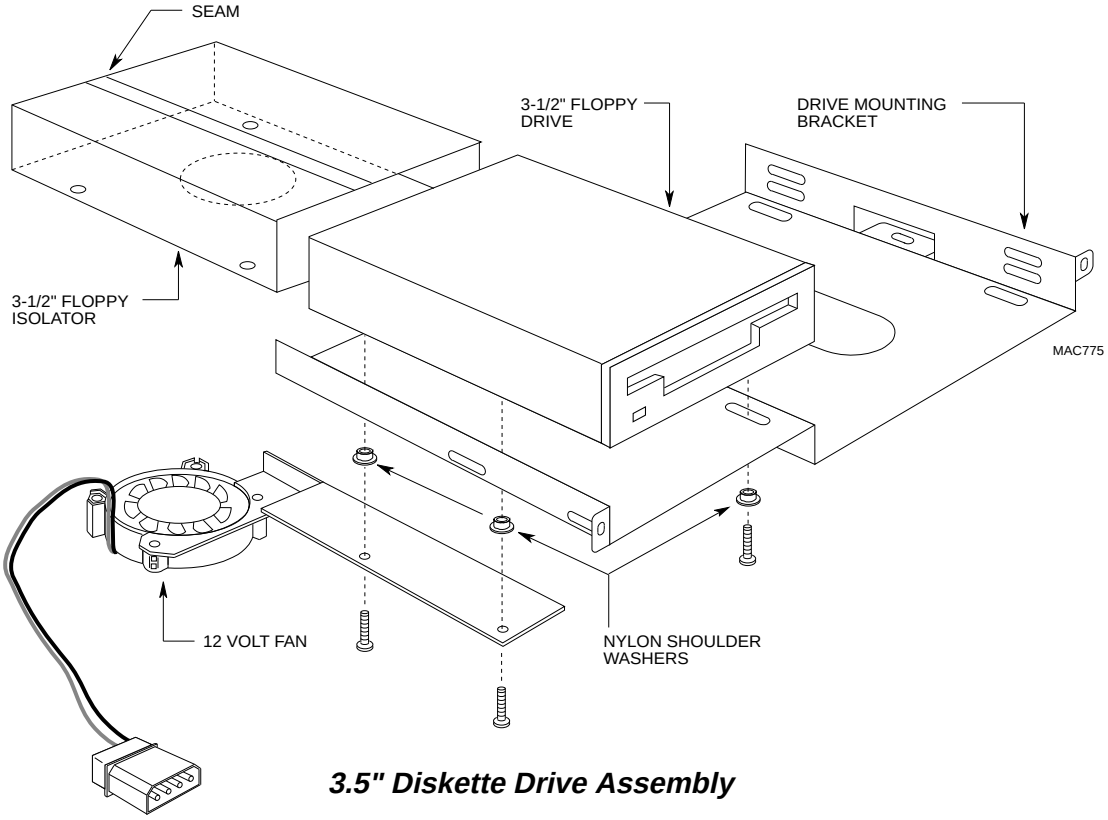

3.5" Diskette Drive Assembly

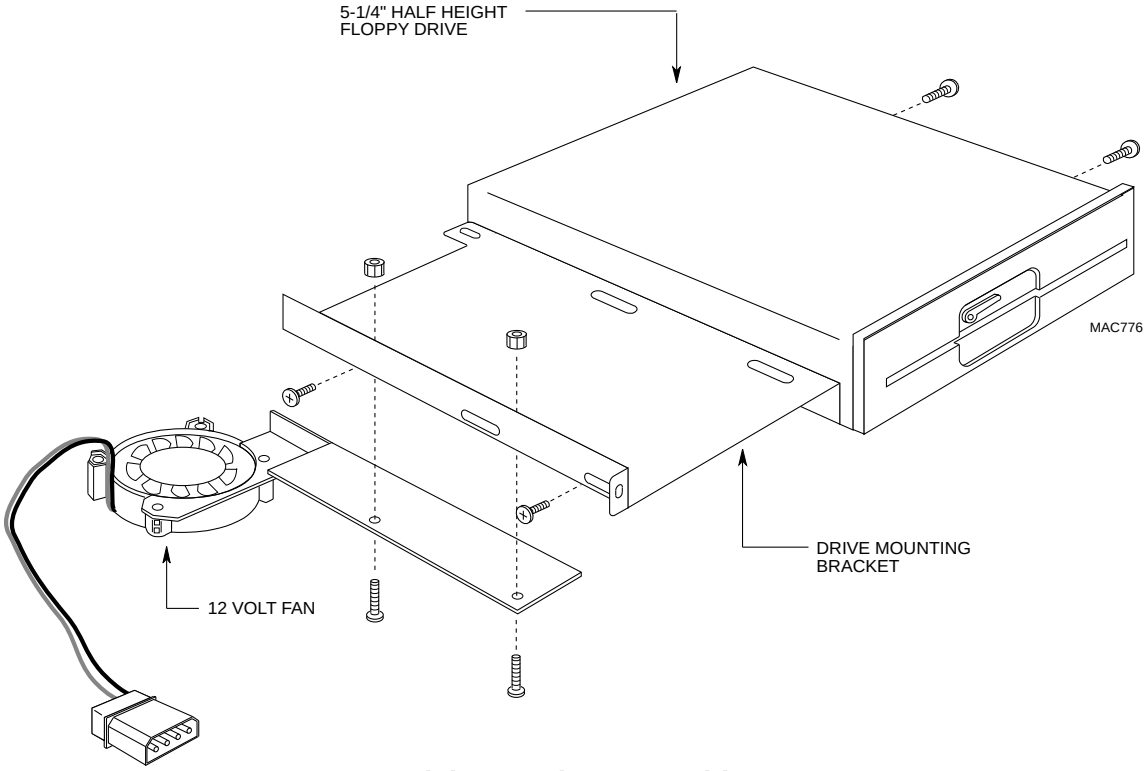

5.25" Diskette Drive Assembly

The next step is to remove the appropriate panel on the front bezel of your computer. The illustration below shows which panel must be removed to accommodate either the 3.5" or 5.25" diskette drive.

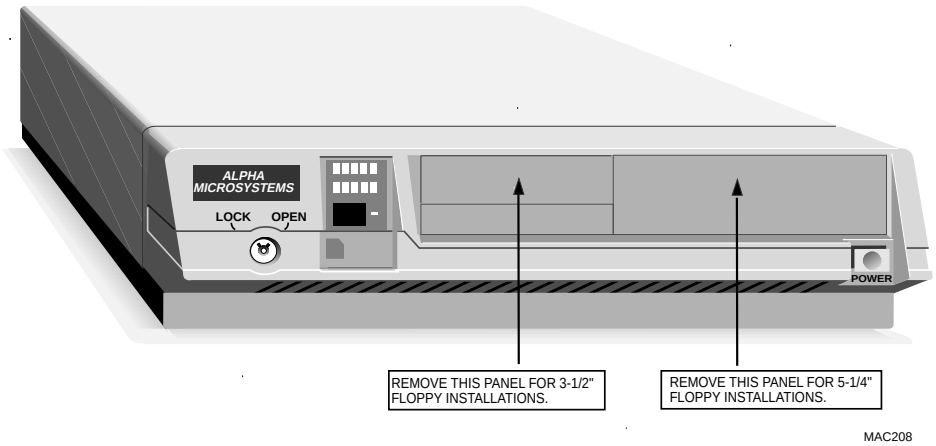

AM-1600 Desktop Front Panel

To remove one of the panels, place your thumb on the back of the panel. When you apply pressure to the middle of the panel, the panel will pop out of the front bezel.

After removing the appropriate panel, set the mounting bracket and drive into position in the chassis. Before screwing down the mounting bracket, adjust the drive so it is flush with the front bezel. Once you are satisfied with its position, carefully remove the mounting bracket and drive assembly from the chassis and tighten the four screws that secure the drive to the mounting bracket. For 3.5" installations, make sure the screws are properly seated on the nylon shoulder-washers and are not touching the metal mounting bracket.

7.0 DISKETTE DRIVE INSTALLATION IN RACK MOUNT AND PEDESTAL COMPUTERS

The following sections describe how to install a diskette drive into AMOS computers using both rack mount and pedestal enclosures. The basic installation procedure is the same for both pedestal and rack mount computers:

- Remove your front bezel.
- Create a cutout in your bezel to support the diskette drive.
- Build the drive mounting assembly.
- Install the drive mounting assembly in your computer.
- Attach the 34-pin interface and power cables.

7.1 Front Bezel Removal and Modification

If you ordered a diskette drive from Alpha Micro, your product installation kit includes instructions describing how to modify your front bezel. The modification requires that you make a cutout in your existing front bezel to accommodate the diskette drive.

1. Follow the instructions in your computer Owner's Manual for removing the top cover.

2. Unplug the ribbon cable that links the display panel on the computer's front bezel to your CPU board.

3. Remove the phillips-head screws holding the front bezel to the chassis.

4. Follow the bezel modification instructions included with your installation kit, then reinstall the bezel.

5. Don't forget to plug the display panel cable back into your CPU board.

7.2 Building and Installing the Diskette Drive Mounting Assembly

The diskette drive mounting assembly is the same for both pedestal and rack mount computers. The assembly consists of three pieces; a plastic mounting base, the diskette drive, and a metal support bracket. The following steps describe how the assembly is put together:

1. The drive sits on top of the plastic mounting base so the bottom of the drive (with reference to an installed diskette) is toward the front panel system status display. This insures the drive is in its proper operational position for both pedestal and rack mount computers. The following illustration shows the position of a mounted 5.25" diskette drive. The relative mounting position is the same for 3.5" drives.

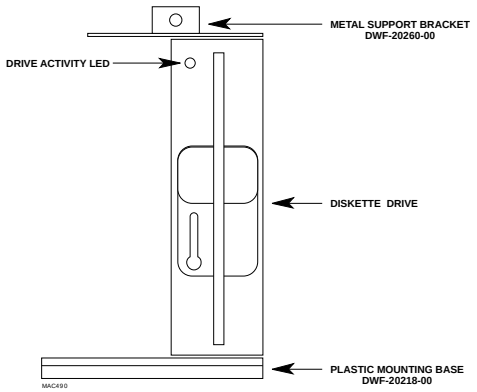

Diskette Drive and Mounting Bracket Assembly

2. The following illustration of the plastic mounting base shows the screw holes used for mounting the drive.

3. If you ordered your diskette drive from Alpha Micro, the screws used to attach the diskette drive to the mounting base are included in the mounting kit. The kit includes both metric and standard screws. Gently thread one of the screws into the drive to determine if you need standard or metric screws for your installation.

4. The diskette drive should be positioned on the mounting base with the drive's front panel pointing in the direction indicated by the arrow in the illustration.

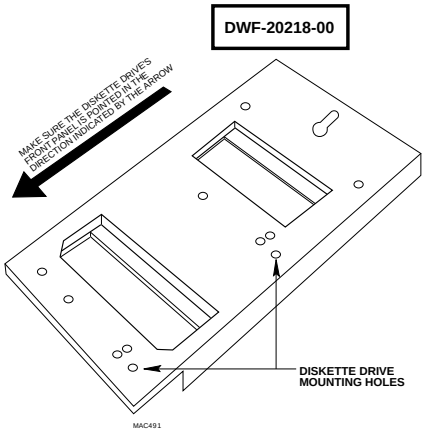

Plastic Mounting Base

5. The following illustration shows the metal top support bracket that secures the drive assembly to the front bezel. The screw holes used to hold the bracket in place are shown in the illustration.

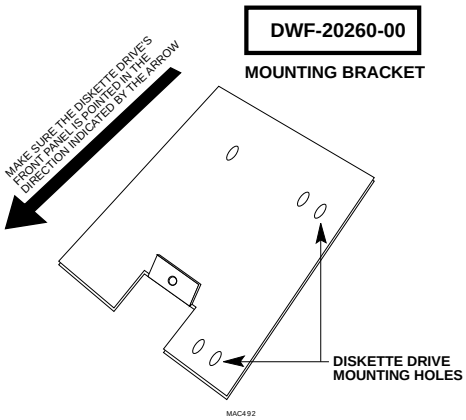

Metal Top Support Bracket

6. Now, take the completed assembly and place it in the chassis so the slots on the bottom of the plastic base fit over and behind the metal tabs on the bottom of the chassis. Once the assembly is in place, slide it forward so the metal tabs lock the base down. When properly positioned, the diskette drive will fit perfectly through the cutout in your bezel.

7. Install the rear screw (included in the mounting kit) that holds the plastic mounting base in place.

8. Install the screw that attaches the metal top support bracket to your front bezel.

9. Don't forget to plug the front panel display cable back into the CPU board.

7.3 Installing a 3.5" Drive in Pedestal and Rack Mount Chassis

The 3.5" diskette drive designed for pedestal and rack mount computers comes with an installation kit that includes a 3.5" to 5.25" mounting adapter. The kit also includes a standard 4-pin DC power connector adapter, a board-edge connector adapter, and instructions on how to install the adapter hardware.

Once the drive is attached to the 5.25" mounting adapter, it installs in the computer in the same way as the standard 5.25" half-high drive, with one exception—**the drive must be electrically isolated from the chassis**. This is accomplished by using two nylon shoulder-washers included in the mounting kit. Install the washers as shown.

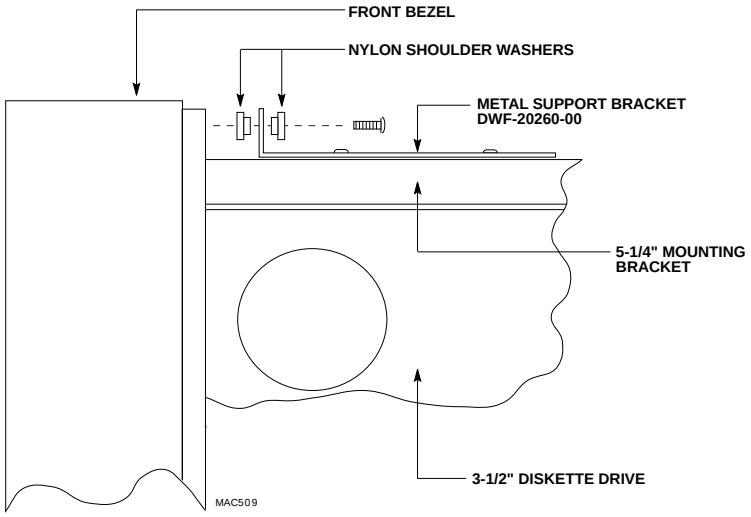

3.5" Diskette Drive Mounting

7.4 Diskette Drive Installation in Other Applications

The owner's manuals for AM-1600 Deskside, Eagle, and AM-990 computers include instructions on how to install peripheral devices, including diskette drives.

The mounting procedure is the same for both 3.5" and 5.25" diskette drives. However, 3.5" diskette drives must be installed in a 5.25" peripheral mounting assembly. The 5.25" peripheral mounting assembly is included in your product installation kit.

8.0 INSTALLING THE AM-219 BOARD

The AM-219 board is designed for use with AM-1400, AM-1600, AM-3000M, AM-4000, and all Eagle series computers. On the following pages, there are separate illustrations showing how the AM-219 board is installed in each of the supported system configurations. Each illustration shows the AM-219 installed in its proper mounting position.

Be careful to note whether or not to remove the extra piece of circuit board attached to the AM-219. For some installations you must remove the extra piece, and for others it must remain attached to the main board for mounting purposes—as shown in the next illustration. Before you modify the AM-219, find the illustration in the following pages which shows how the AM-219 must be mounted on your CPU board.

If your CPU board does not already contain the AM-219 plastic mounting standoffs, you must install the required standoffs where indicated in the following illustrations, prior to mounting the AM-219 board.

To install the AM-219 board, carefully press your AM-219 board into position, using the appropriate illustration as a reference. Make sure the AM-219 board is properly seated into the 36-pin connector. Press the board down enough so the two plastic standoffs on the CPU board snap into the two corresponding holes on the AM-219 board.

A section of the AM-219 board is designed to be removed when installed on an AM-319, AM-137 (Eagle), or later CPU board. However, on all older systems, the AM-219 must be installed in its entirety. When plugging and unplugging the 34-pin interface cable that plugs into the J2 connector on the AM-219 board, you must be careful not to use so much force that you cause the AM-219 to snap where the two sections come together.

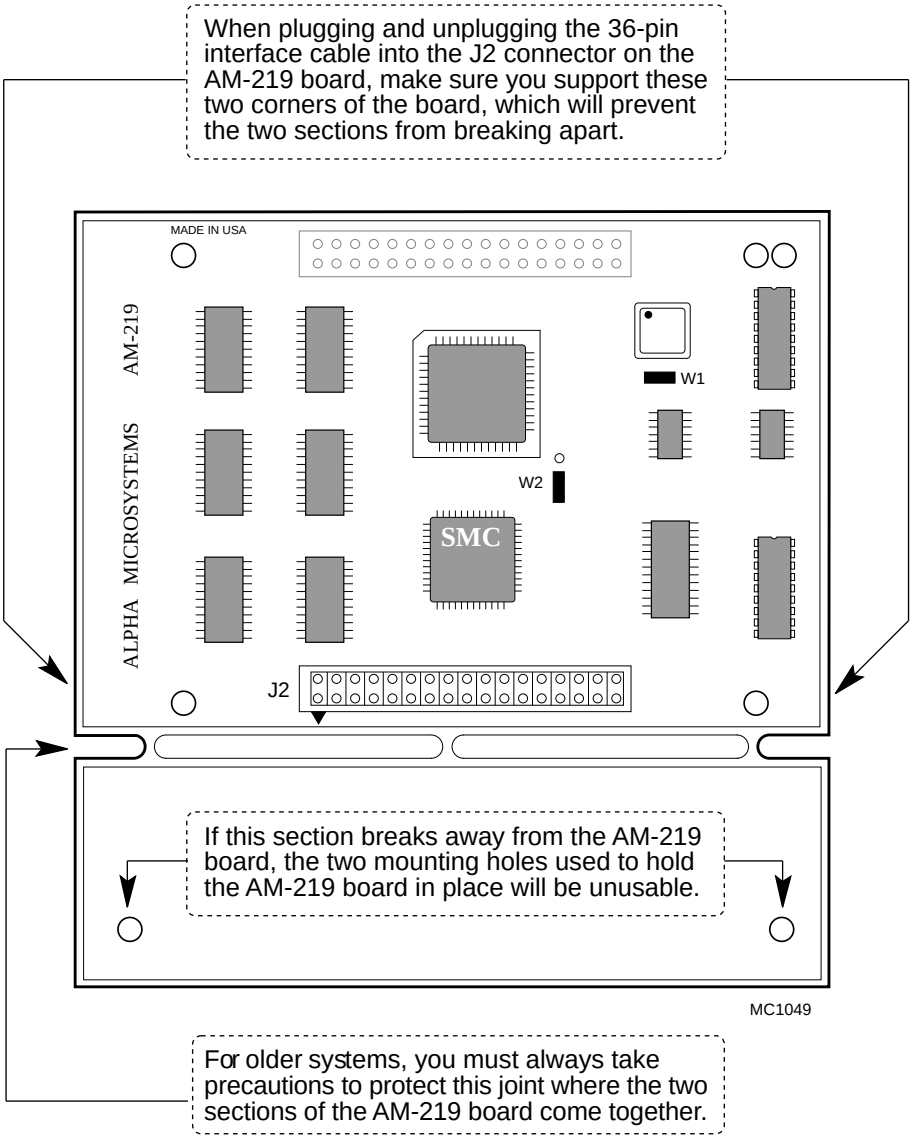

AM-219 Handling Precautions

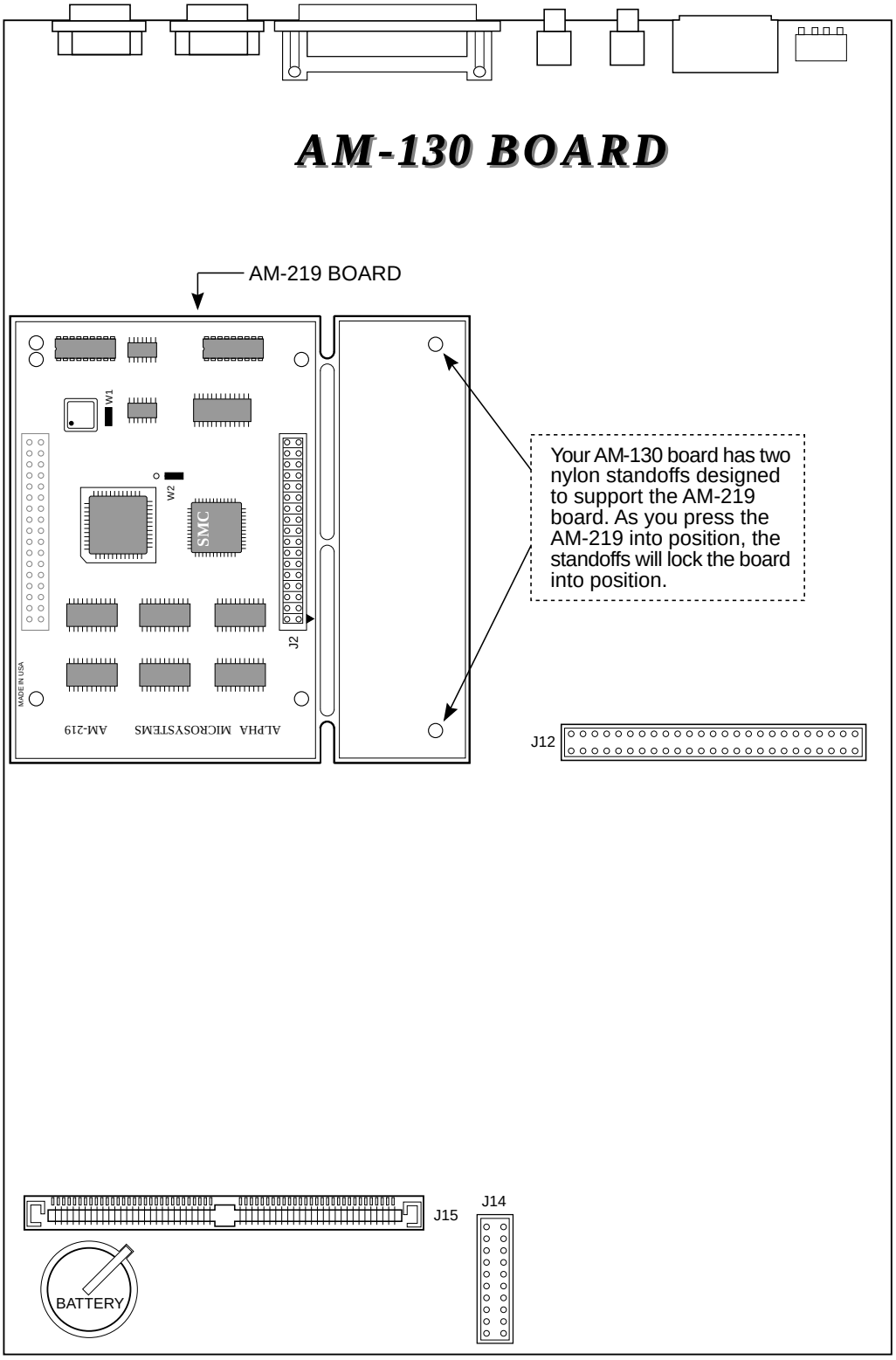

AM-219 Installation on AM-130 Board (AM-1400 Systems)

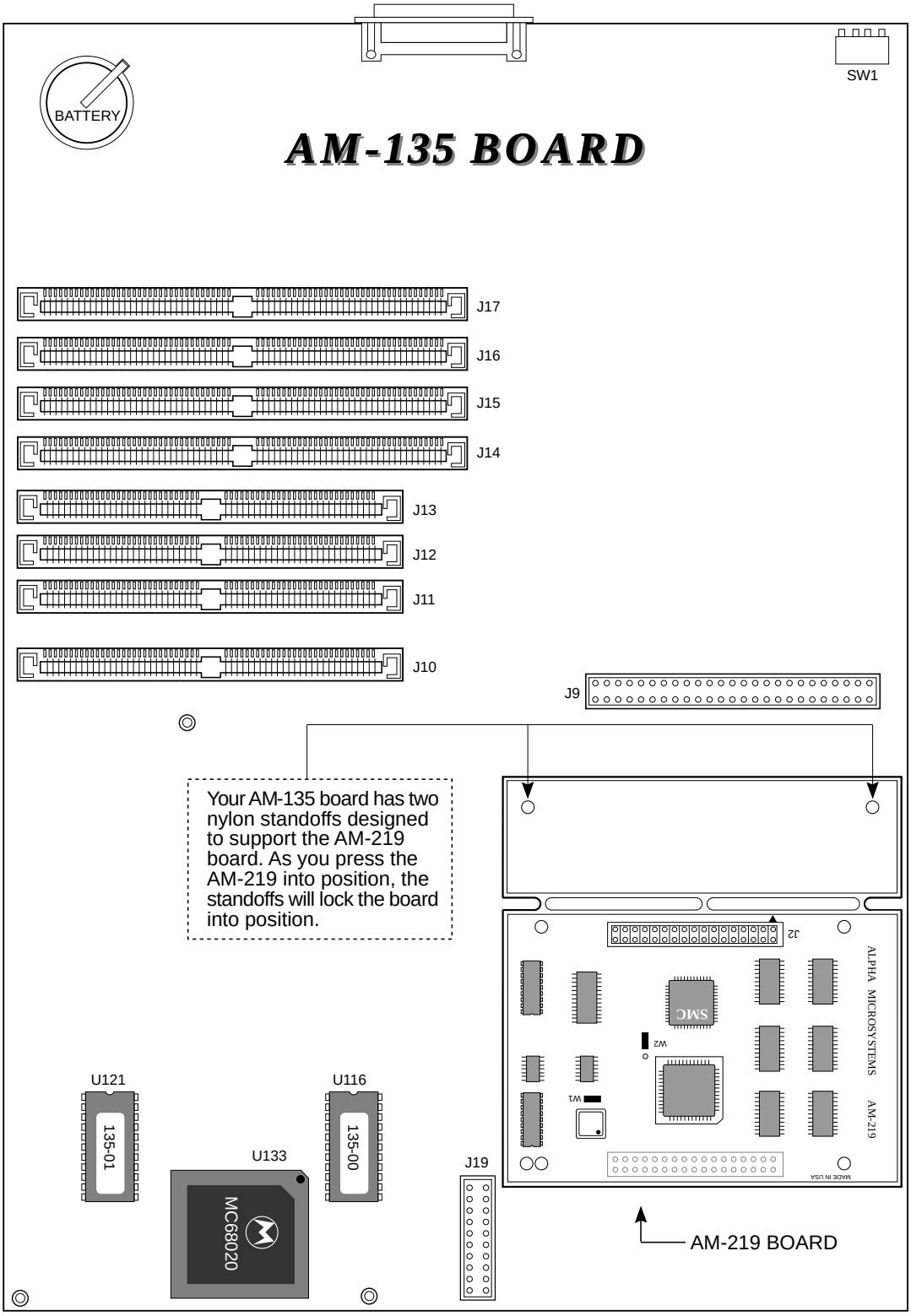

MC1032

AM-219 Installation on AM-135 Board (AM-1600 Systems)

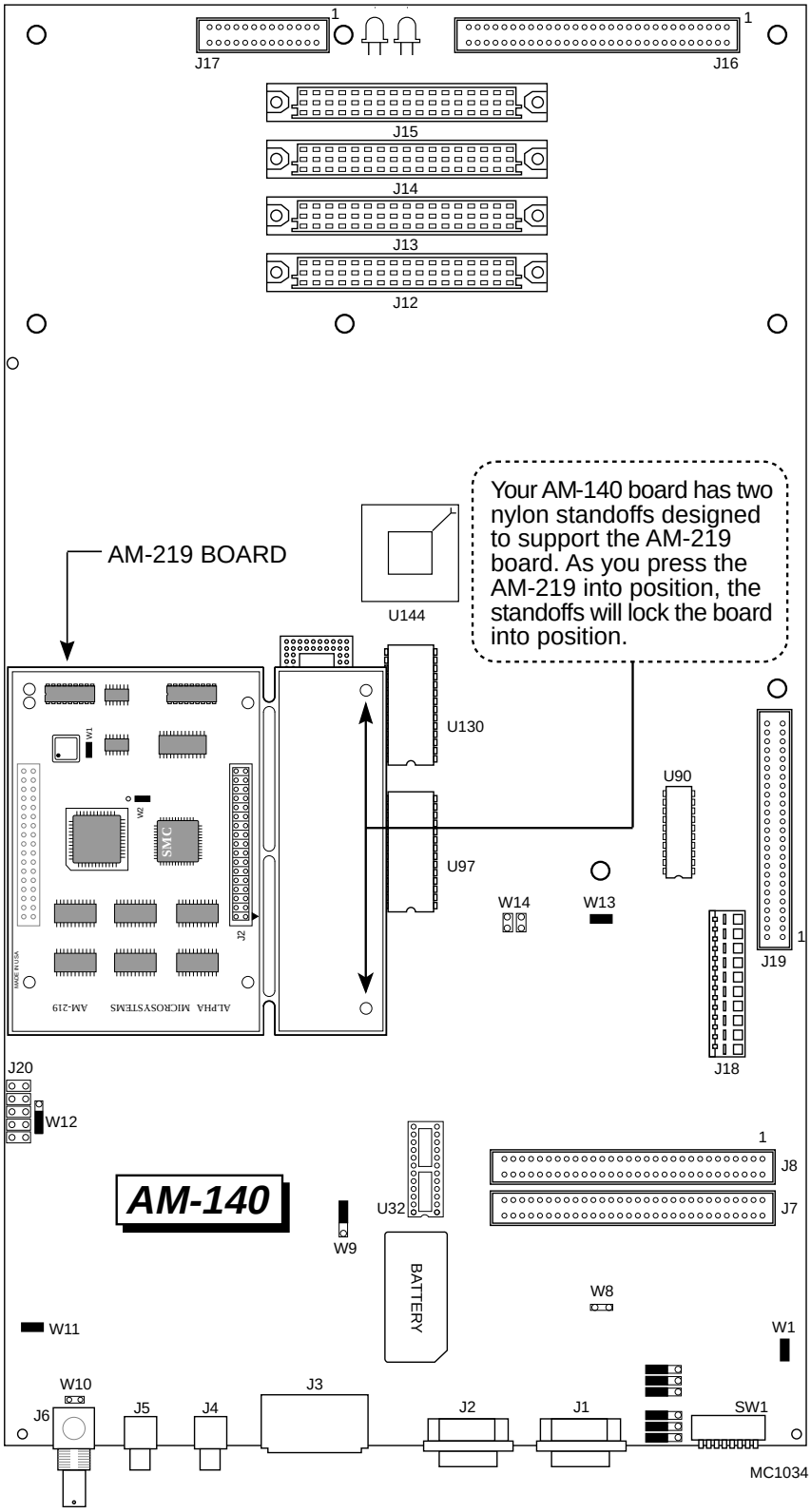

AM-219 Installation on AM-140 Board (AM-3000M Systems)

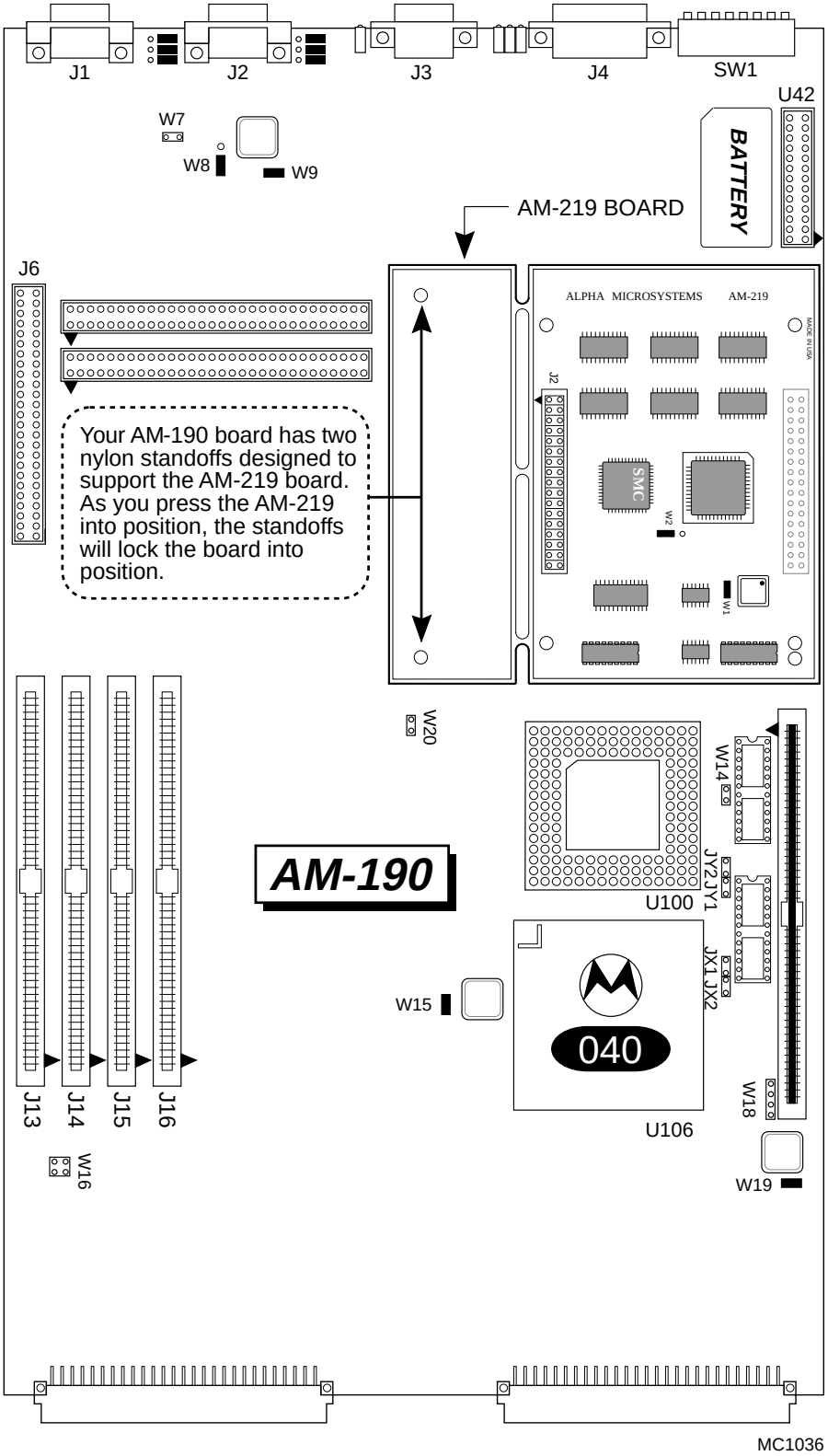

AM-219 Installation on AM-190 Board (AM-4000V/4000M Systems)

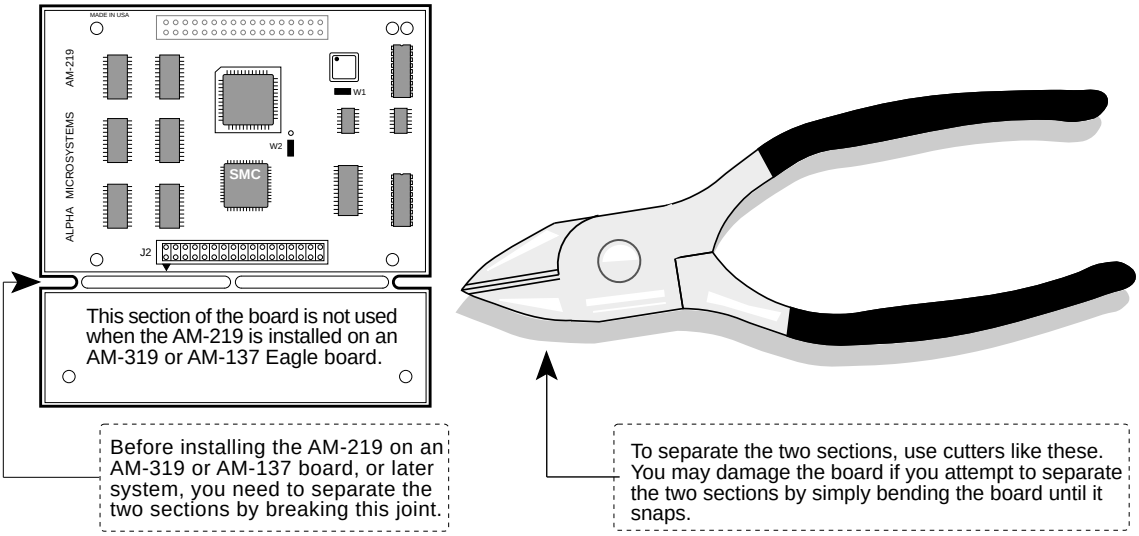

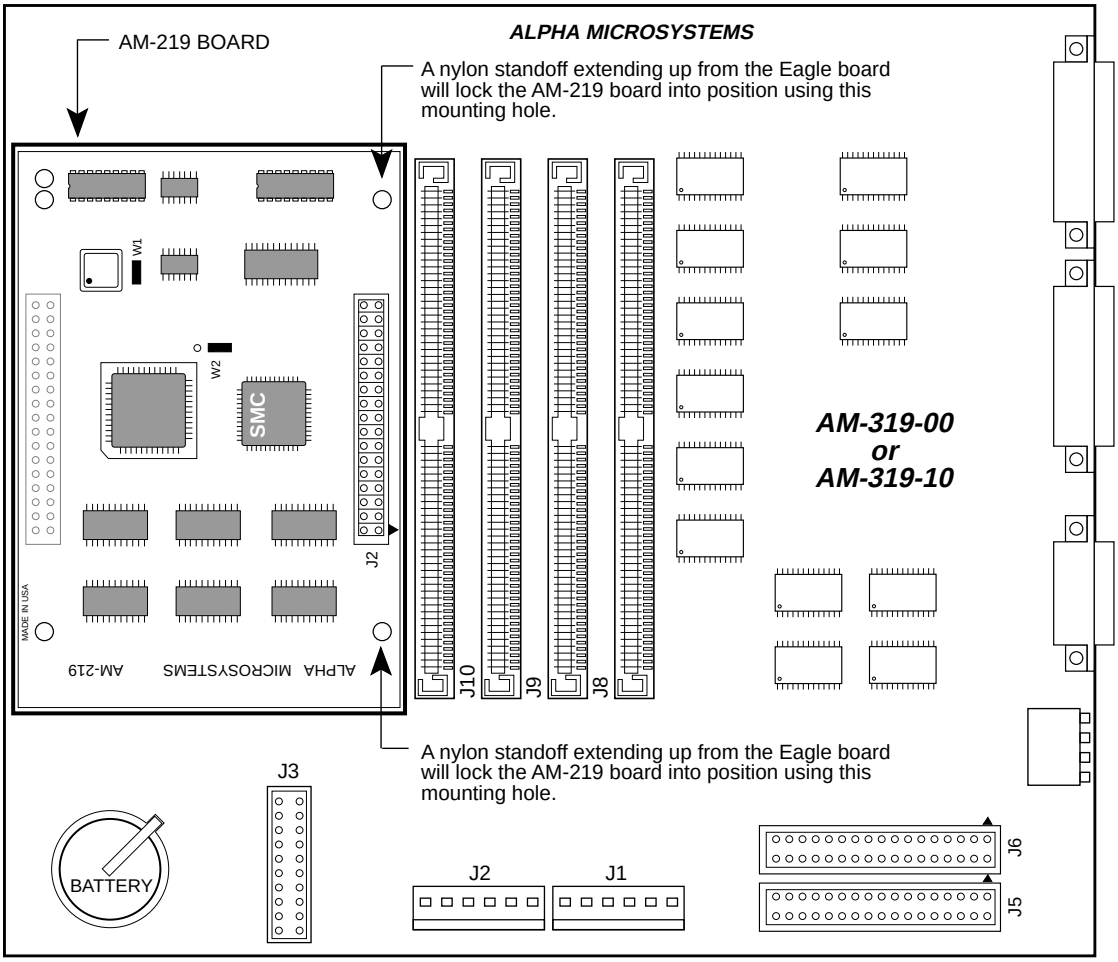

AM-219 Installation on AM-319-00/-10 Boards (Eagle 200-500 Systems)

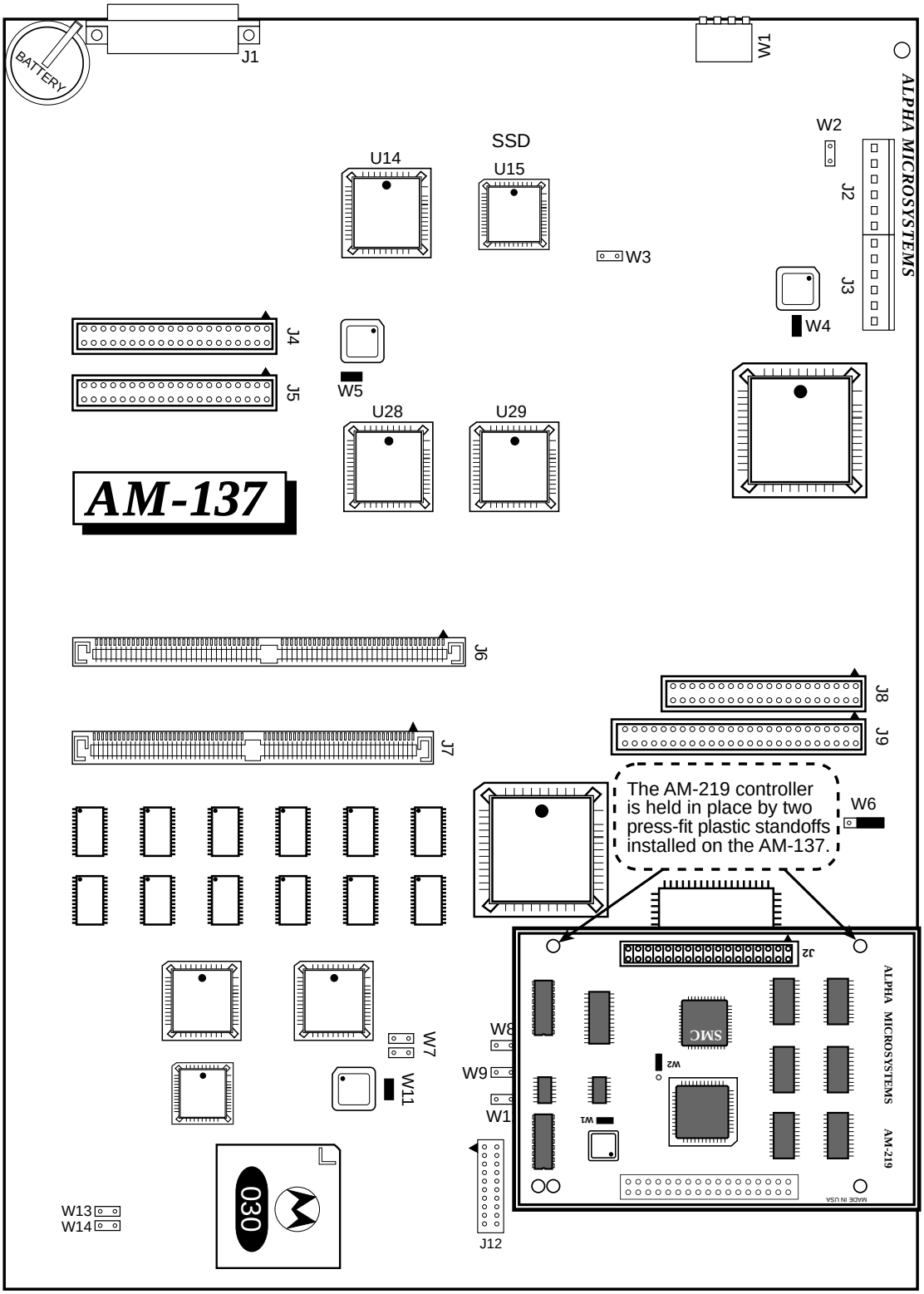

MC1281

AM-219 Installation on AM-137 Board (Eagle 100 Systems)

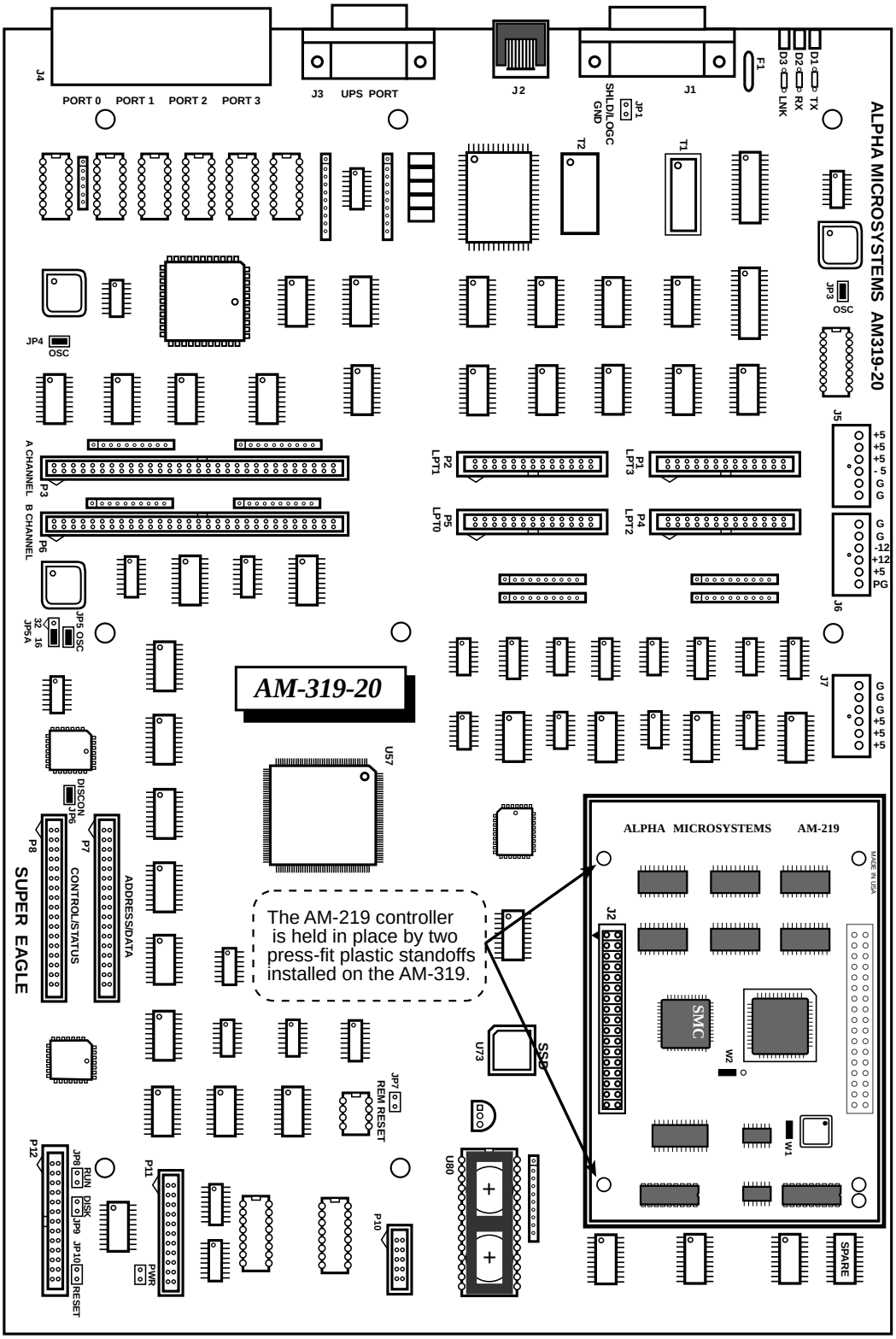

MC1282

AM-219 Installation on AM-319-20 Board (Eagle 550 Systems)

9.0 CONNECTING THE INTERFACE CABLE

If you're upgrading from an AM-214 to an AM-219 diskette controller, simply plug your existing 34-pin interface cable into the J2 connector on the AM-219 board. Make sure the colored stripe on the cable aligns with pin-1 on the AM-219's 34-pin connector.

The AM-219 product installation kit comes with a 34-pin PC style interface cable designed for both dual and single drive applications. This cable requires that you configure your diskette drive to drive select 1; if you have two diskette drives, both drives must be configured to drive select 1. With the PC style interface cable, it is the cable, *not the drives*, that determines which drive is 0 and which drive is 1. If look closely at the PC style cable, you can see a twist in the cable just before the last diskette drive connector; this twist determines the drive select number. The cable has two board-edge connectors; **the drive attached to the connector at the *end* of the cable is always drive 0**; a drive connected to the other connector is drive 1. When installing this cable, make sure the colored stripe on the cable aligns with pin-1 on the AM-219's 34-pin connector, as well as pin-1 on your diskette drive or drives. Illustrations in this document show the pin-1 location for the AM-219 controller and the diskette drives.

To connect a 3.5" diskette drive to the 34-pin interface cable included in your installation kit, you must use an adapter that converts the standard 34-pin connector on the drive into a board-edge type connector. The board edge adapter is included as part of the mounting kit shipped with 3.5" diskette drives sold by Alpha Micro. This type of board-edge adapter is also available from any computer supply outlet.

9.1 Connecting the Power Cable

AM-1400/1600 Desktop computers contain one small 4-pin power connector designed to fit a 3.5" diskette drive, and one standard 4-pin power connector designed to fit a 5.25" drive. For other applications, the product installation kit includes an adapter to allow a 3.5" drive to be plugged into a standard 4-pin power connector. The power connectors are keyed and can only be plugged in one way.

Plug the appropriate 4-pin power connector into your diskette drive.

For AM-1400/1600 Desktop applications, don't forget to plug in the power connector for the small additional 12 volt cooling fan.

10.0 FINISHING THE INSTALLATION

Before re-installing the top cover, make sure the following items are in order.

- Double check your power and interface cable connections.
- Make sure you have tightened the screws removed during the installation process.

11.0 CREATING A SOFTWARE DRIVER

Be sure you have a current version of the generic AM-219 device driver (219DVR.DVR), and the FIX program (FIX219.LIT) to create the applicable system driver you want to use. The device driver and fix program are included in current AMOS 1.4C and 2.2C (or later) operating system releases. They may also be obtained from the Alpha Micro Technical Assistance Center or via TABBS.

Before you can access the diskette drive connected to your AM-219, you must create a device driver. The program used to make software drivers for use with the AM-219 is called FIX219.LIT. FIX219 incorporates the generic 219DVR.DVR and allows you to create a system driver in one of eight possible formats:

- AMOS 720KB 3.5" double density
- AMOS 800KB 5.25" double density
- AMOS 1.2MB 5.25" high density
- AMOS 1.44MB 3.5" high density
- PC 360KB 5.25" double density
- PC 720KB 3.5" double density
- PC 1.2MB 5.25" high density
- PC 1.44MB 3.5" high density

You may wonder why you would want to use a PC format on an AMOS computer. When the AM-219 is used in fast computers (e.g., Eagle and other Roadrunner based computers), the PC format is faster at both reading from and writing to the diskette. However, there are a few limitations to using the PC formats in your AMOS computer:

1. Data written by your AMOS computer using any of the PC formats cannot be read by a PC, unless, of course, your PC has been upgraded with an Alpha Micro Falcon board.

2. If you want to create a bootable diskette, you need to choose either the 5.25" 800KB AMOS format or the 3.5" 1.44MB AMOS format; you cannot make a bootable diskette using any of the other six formats.

With some other AMOS diskette controllers, you used BMIN.DVR or BFLP.DVR to make bootable diskettes. BMIN.DVR and BFLP.DVR are part of AMOS 1.X and AMOS 2.X software releases. However, with the AM-219 board you create a diskette driver using FIX219, then embed that driver into the monitor on your diskette using MONGEN. The BMIN and BFLP drivers are not compatible with the AM-219 board.

If you wish to boot your system from the AM-219 and a diskette, you need to make sure the boot PROMs in your computer meet the revision level requirements in the table below:

CIRCUIT BOARD PART NUMBER	SYSTEM CONFIGURATION	MINIMUM BOOT PROM REVISION
DWB-00130-XX	AM-1400	B00
DWB-00134-XX	AM-1400	D00
DWB-00135-XX	AM-1600	D00
DWB-00140-XX	AM-3000M	E00
DWB-00190-XX	AM-4000	A04
DWB-00137-XX	EAGLE 100	K00
DWB-00319-00	EAGLE 200	A00
DWB-00319-10	EAGLE 300-500	A00
DWB-00319-20	EAGLE 550	N/A (CMOS)

Unlike other Alpha Micro computers, the AM-190 based AM-4000 computer has a special plug-in module that contains the boot PROMs. In order to update the boot PROMs, you must install a new boot PROM module. In the case of the AM-4000, the minimum boot PROM revision listed in the table above is for the entire plug-in boot PROM module assembly.

For systems with a **CMOS Configuration Menu**, such as the Eagle 550, the boot PROM revision is irrelevant since any boot device can specified in the initial boot setup menu. See your computer *Owner's Manual* for more details on the CMOS Configuration Menu.

The following two examples show how to create both AMOS and PC diskette drivers. The user input appears in **bold:**

AMOS FORMAT: Diskette Driver Example

```
LOG DVR: RETURN
FIX219 RETURN

Enter desired driver format:

     (A) PC 1.44Mb 3 1/2"
     (B) PC 720Kb 3 1/2"
     (C) PC 1.2Mb 5 1/4"
     (D) PC 360Kb 5 1/4"
     (E) AMOS 720Kb 3 1/2"
     (F) AMOS 800Kb 5 1/4"
     (G) AMOS 1.2MB 5 1/4"
     (H) AMOS 1.44Mb 3 1/2"

Selection: H RETURN
Enter new driver name: FLP RETURN
New driver is now in memory, bitmap size is 180
```

To save the driver to your hard disk drive, type:

```
SAVE FLP.DVR RETURN
```

PC FORMAT: Diskette Driver Example

```
LOG DVR: RETURN
FIX219 RETURN

Enter desired driver format:

     (A) PC 1.44Mb 3 1/2"
     (B) PC 720Kb 3 1/2"
     (C) PC 1.2Mb 5 1/4"
     (D) PC 360Kb 5 1/4"
     (E) AMOS 720Kb 3 1/2"
     (F) AMOS 800Kb 5 1/4"
     (G) AMOS 1.2MB 5 1/4"
     (H) AMOS 1.44Mb 3 1/2"

Selection: A RETURN
Enter new driver name: PCF RETURN
New driver is now in memory, bitmap size is 180
```

To save the driver to your hard disk drive, type:

```
SAVE PCF.DVR RETURN
```

12.0 MODIFYING THE SYSTEM INITIALIZATION COMMAND FILE

To define the diskette drive attached to your computer, use the COPY command to make a copy of your system initialization command file, calling it TEST.INI. For example:

```
LOG SYS: RETURN
COPY TEST.INI=AMOS32.INI RETURN
```

Then edit that copy using the AlphaVUE text editor, making the modifications discussed in the following sections.

WARNING! NEVER modify the system initialization command file directly. Always make a copy and modify the copy. If you modify your AMOSL.INI or AMOS32.INI file directly and make a mistake, your computer may not boot! If you make a copy, you can test your changes using the MONTST command, as described below, then rename the test command file to AMOSL.INI or AMOS32.INI only when you know it works correctly.

The following sections describe the steps required to define a diskette drive in your system initialization command file.

12.1 Modifying the Device Table

The first thing you need to do in your TEST.INI file is add a new DEVTBL statement. In the system initialization command file, DEVTBL tells AMOS which devices to look for on the computer. The DEVTBL line in **bold** below defines a 3.5" diskette drive.

```
DEVTBL DSK1
DEVTBL TRM,RES,MEM
DEVTBL FLP0
```

12.2 Adding a BITMAP Statement

The next step is to add a BITMAP statement for the diskette drive:

```
BITMAP DSK,,0,1
BITMAP FLP,180,0
```

This is an example only! Make sure the BITMAP statement you add uses the correct device name and bitmap size for your diskette drive.

12.3 Adding the Device Driver to System Memory

You must load the driver for any peripheral device into system memory. Add a SYSTEM statement similar to this one before the final SYSTEM command:

```
SYSTEM FLP.DVR[1,6]
```

12.4 Sample System Initialization Command File

When combined, the DEVTBL, BITMAP and SYSTEM statements look something like the example below:

```
DEVTBL DSK1
DEVTBL TRM,RES,MEM
DEVTBL FLP0
;
BITMAP DSK,,0,1
BITMAP FLP,180,0
;
SYSTEM CMDLIN.SYS
SYSTEM SYSMSG.USA
SYSTEM MOUNT.LIT
SYSTEM FLP.DVR[1,6]
SYSTEM
```

12.5 Testing the Initialization File

When you have finished editing the TEST.INI file, enter **F** RETURN to finish and exit from AlphaVUE. Warn other users on your system that you will be rebooting the system, then use the MONTST program to reboot. For example:

```
MONTST AMOS32.MON,TEST.INI RETURN
```

Watch the terminal screen to make sure your computer boots without error. If the system boots successfully, copy your test initialization file to your "real" initialization file name. For example:

```
LOG SYS: RETURN
COPY AMOS32.INI=TEST.INI RETURN
```

13.0 FORMATTING AND INITIALIZING A DISKETTE

Follow the steps below to format and initialize a diskette.

These steps erase all data on the diskette! Before you use the format program make sure the diskette is blank, or does not contain files you need!

1. Insert the diskette into the drive; don't use the MOUNT command. Instead, enter:

   `LOG OPR:` RETURN
   `FMT219 devn:` RETURN

   where ***devn:*** is the name of your diskette drive—probably FLP0: or MIN0:. You now see the message:

   ```
   BEGIN FORMATTING
   ```

   When it is finished, FMT219 displays:

   ```
   EXIT
   ```

   The diskette is now formatted. Before you can use the diskette, you need to initialize it.

2. Now, use the SYSACT command to initialize the diskette. Type:

   `SYSACT devn:` RETURN

3. You now see the SYSACT prompt symbol, an asterisk. Type **`I`** RETURN (the SYSACT Initialize command):

   `*I` RETURN

   SYSACT asks you to confirm this command:

   ```
   Initializing the disk clears all files -
   enter Y to confirm:
   ```

   Type **`Y`** RETURN. Now SYSACT asks you:

   ```
   Reserve space for how many accounts?
   ```

   The default is 64 accounts, which is probably more than enough. Press the RETURN key to accept this number.

4. Use the E command to exit SYSACT and return to AMOS command level:

   `*E` RETURN

The diskette is now ready to use. To log onto the diskette and write data to it, you need to add accounts to the diskette. Use the SYSACT command again and use the A (Add) option. For example, to add accounts [100,2] and [120,0] on the diskette in device FLP0:, type the following commands:

```
SYSACT FLP0: RETURN
*A 100,2 RETURN
Password: RETURN
*A 120,0 RETURN
Password: MINE RETURN
*E RETURN
```

In this example, one of the new accounts, [100,2], is not protected by a password, and the other, [120,0], is protected by the password MINE.

14.0 USING YOUR DISKETTE DRIVE

Complete instructions for using diskette drives are included in the *Owner's Manual* for your computer.